ELECTRIC POWER RESEARCH INSTITUTE

July 23, 1979

EPRI

The Honorable Mike McCormack
U. S. House of Representatives
Washington, D. C. 20515

Dear Mike:

Your recent letter requested additional information on twelve questions as a follow-on to the Hearings on Nuclear Power Plant Safety. I must apologize for this delayed response which is largely due to my extremely heavy travel schedule. Several of the questions that you pose raise broad issues still under study, but I will attempt to provide you some indication of what my current thinking is:

Q1) Is there a need for a "Swat Team" composed of people from industry, the utilities, the NRC, etc.?

A1) It is not clear what is meant by a "Swat Team". If the question refers to a group to come in, take control, and operate the plant, it might well be both unsound and unsafe. Each plant is somewhat different, and it is essential that only people familiar with a specific plant in great detail be allowed to operate it. On the other hand, support groups - both technical and non-technical - to provide backup for the plant staff can be very useful. Whether such backup support comes from the utility itself or from a broader group depends upon the size and resources of the utility. Alternative ways of providing such support are under study as part of the current industry overall review and assessment.

Q2) What are the advantages and disadvantages of standardizing the design of nuclear power plants? and

Q3) What would be the attitude of equipment manufacturers and plant constructors to standardization?

A2 & A3) The question of standardization of power plants is extremely complex. When one considers the barriers of the present licensing process, the difference in site requirements (seismic, etc.), the difference in location - (no-frost areas like Florida versus cold areas like Minnesota or Michigan) - and technical differences arising from things like sea water versus fresh water cooling, true standardization to a single design is probably not possible or even desirable. On the other hand, standardized systems or subsystems are probably quite possible and might be very valuable if the licensing system were revised to make their use practical. If a system design could be licensed so that it could be manufactured in a controlled manner and purchased with an assurance that it was usable in a licensed plant, it might be quite practical. On the other hand, if it

Headquarters: 3412 Hillview Avenue, Post Office Box 10412, Palo Alto, CA 94303 (415) 855-2000
Washington Office: 1750 New York Avenue NW Suite 835, Washington, DC 20006 (202) 872-9222

cannot be licensed in advance of purchase, there is little chance that any move toward standardization will occur. A major advantage of standardization is that very extensive analysis and study combined with the learning curve that comes from repetition tends to produce more reliable and cheaper plants. On the other hand, if standardization is carried too far (winter insulation in southern plants, etc.), the non-optimum feature may override the good - thus the idea of standard building blocks rather than a standard plant.

Q4) Should there be a standard design for control rooms and for the layout of control room instrument and control panels?

A4) If the plants are not identical, the control rooms probably cannot be identical. (The panel of a DC-10 is not identical to that of a 747, etc.) However, better use of Human Factors Design can probably be made in most cases. More important than a standard control room may be a control room designed for off normal as well as normal operations. This might include methods of prioritizing alarm signals, etc. This area is also currently under study.

Q5) Discuss and provide recommendations for means of using computers or microprocessors to enhance the power plant operator's ability to recognize abnormalities.

A5) The question of data display is extremely complex and currently under study. It isn't yet clear whether more computerization or less computerization is the right answer. For example, in many cases, "old fashioned" strip chart recorders give a clearer picture of what is happening than a computer printout with alarms does. The overall system optimization of man-machine interface remains to be done.

Q6) What design changes or procedural changes would you recommend to improve the defense against lesser accidents that you mentioned in your testimony?

A6) To protect against lesser accidents requires a detailed plant specific review. A review of set points such as building isolation systems, when safety and emergency systems are activated or initiated, are the plant staff trained for lesser events or only "big breaks", do the emergency procedures cover small accidents, is the emergency power supply correct for small accidents, etc. Specific design and procedural changes (if any) will follow from such a plant specific review and are generally not generic.

Q8) What role should your institution play in improving nuclear power plant safety?

A8) EPRI has underway substantial R & D programs whose objectives are improved understanding of safety related issues of nuclear power. Some of these programs will be refocused such as from big LOCA's to smaller LOCA's, etc. However, many of the questions are

institutional, legal or engineering applications rather than R & D and currently EPRI has a role only in such matters as pertain to R & D.

Q9) List the research and development programs which you would recommend to improve nuclear power plant safety.

A9) The TMI accident has not really identified new areas of research, but only indicated some changes of priority. Although I am in the "research business", I would advocate serious review before any extensive new programs are launched in the name of improved nuclear safety. There are a few obvious cases such as improved Human Factor Studies, etc., but a much more urgent need is probably support for basic and applied work in chemistry and materials - support that has largely disappeared since the transition of the AEC into ERDA and then DOE. Problems like pipe cracking and turbine cracking not only affect nuclear plants, but are important in all power plants. Similar problems will arise in pipe lines, synthetic fuel plants, thermal solar plants, geothermal plants, etc. Substantial long-term programs are needed in materials properties, materials aging, stress corrosion, basic corrosion phenomena, fracture mechanics, crack arrest, crack propagation, fabrication effects, non-destructive testing, and all the related aspects of the life expectancy and causes of deterioration of metal components.

Q10) Should the training of nuclear power plant operators be improved? List your recommendations.

A10) Operator training should probably be revised. It isn't yet clear what "improved" means. The operator is one part of the system, and more assessment and study is required before it is clear what the optimum training should consist of. The plan being prepared for the industries' new Institute of Nuclear Power Operation (INPO) will be addressing this as a major issue.

Q11) Should the control room operators be employed by the utility or should they be employed by some other agency?

A11) Control room operators should be employed by the entity responsible for the plant. The idea of non-line organization employees has really never been very successful, especially when serious questions of responsibility are concerned.

Q12) How can the performance of the NRC be improved?

A12) Any organization can be improved - few things are perfect. The purpose of improvements is to do a better job or to come closer to achieving an objective. I believe that before changes are made in the NRC, it is necessary to clarify its' objective. At the moment, its' charter seems quite diffuse and possibly so broad

as to interfere with its' primary mission. I believe the function of the NRC should be strictly limited to assuring public health and safety. Questions of need for power are already the domain of state PUC's or similar authorities; a "better site" syndrome can lead to nothing other than administrative paralysis - the question should be only "is the proposed site safe enough?"; the review of export hardware can certainly not be significant in the absence of either details or control over the entire system in which the hardware will be used (the NSSS is approximately 10% of the total plant). This does not mean there should not be export licensing - but political objectives and controls should be separated from the NRC role in public health and safety. After the objectives are clarified, then changes can be recommended to improve the probability of achieving those objectives. My personal conclusions are that this should result in a smaller, more streamlined organization rather than an even larger more diffuse organization.

Again, let me apologize for the late response.

Sincerely,

ELECTRIC POWER RESEARCH INSTITUTE

Milton Levenson
Director
Nuclear Power Division

ML:pb

DON FUQUA, FLA., CHAIRMAN
ROBERT A. ROE, N.J.
MIKE MC CORMACK, WASH.
GEORGE E. BROWN, JR., CALIF.
JAMES H. SCHEUER, N.Y.
RICHARD L. OTTINGER, N.Y.
TOM HARKIN, IOWA
JIM LLOYD, CALIF.
JEROME A. AMBRO, N.Y.
MARILYN LLOYD BOUQUARD, TENN.
JAMES J. BLANCHARD, MICH.
DOUG WALGREN, PA.
RONNIE G. FLIPPO, ALA.
DAN GLICKMAN, KANS.
ALBERT GORE, JR., TENN.
WES WATKINS, OKLA.
ROBERT A. YOUNG, MO.
RICHARD C. WHITE, TEX.
HAROLD L. VOLKMER, MO.
DONALD J. PEASE, OHIO
HOWARD WOLPE, MICH.
NICHOLAS MAVROULES, MASS.
BILL NELSON, FLA.
BERYL ANTHONY, JR., ARK.
STANLEY N. LUNDINE, N.Y.
ALLEN E. ERTEL, PA.
KENT HANCE, TEX.
JOHN W. WYDLER, N.Y.
LARRY WINN, JR., KANS.
BARRY M. GOLDWATER, JR., CALIF.
HAMILTON FISH, JR., N.Y.
MANUEL LUJAN, JR., N. MEX.
HAROLD C. HOLLENBECK, N.J.
ROBERT K. DORNAN, CALIF.
ROBERT S. WALKER, PA.
EDWIN B. FORSYTHE, N.J.
KEN KRAMER, COLO.
WILLIAM CARNEY, N.Y.
ROBERT W. DAVIS, MICH.
TOBY ROTH, WIS.
DONALD LAWRENCE RITTER, PA.

COMMITTEE ON SCIENCE AND TECHNOLOGY
U.S. HOUSE OF REPRESENTATIVES
SUITE 2321 RAYBURN HOUSE OFFICE BUILDING
WASHINGTON, D.C. 20515

HAROLD A. GOULD
EXECUTIVE DIRECTOR
PHILIP B. YEAGER
REGINA A. DAVIS
JAMES E. WILSON
WILLIAM G. WELLS, JR.
RALPH N. READ
JERRY STAUB
JAMES W. SPENSLEY
STEPHEN LANES
IAN W. MARCEAU
MINORITY STAFF DIRECTOR:
PAUL A. VANDER MYDE

Mr. William J. L. Kennedy
Vice President and Director of Engineering
Stone and Webster Engineering Corporation
P.O. Box 2325
Boston, MA 02107

Dear Mr. Kennedy:

Thank you for providing testimony at our subcommittee hearings on Nuclear Power Plant Safety on May 22, 1979. During these hearings you indicated that you would provide the subcommittee with responses to a number of questions, together with other additional information. Enclosed is a list of questions; we would appreciate receiving your response by June 25, 1979.

Thank you for your cooperation.

Sincerely,

MIKE McCORMACK
Chairman, Subcommittee on
Energy Research and Production

Enclosure

SUBCOMMITTEE ON ENERGY RESEARCH AND PRODUCTION

HEARINGS ON NUCLEAR POWER REACTOR SAFETY

ADDITIONAL QUESTIONS FOR MR. KENNEDY

1. What is your professional opinion of the performance of design engineers in general (not related to Stone and Webster)? What are their attitudes regarding attention to detail, personal responsibility, outside study to maintain technical competence, thirst for perfection, etc.?

2. What is your opinion of design supervisors? Do they check the work of their engineers and designers? How carefully? Are they timid, or do they criticize? Do they develop their personnel into better engineers?

3. If these questions seem out of place, why was there no way of verifying that a major valve was open or seated on the primary loop of Plant No. 2 at TMI when an open valve could, in itself, constitute a LOCA?

4. What is your opinion of the effectiveness of the NRC during the design phase? Do they do complete detailed design reviews? Do they have adequate personnel for this? Are they sincere? Do they interact constructively with the utilities, the equipment manufacturers and design engineers? Are they procedure oriented or plant oriented?

5. What is your opinion of the construction workers? Specifically, do they want to work? For power plant construction, what is the productivity of labor today vs 1969 in such measureable items as inches of weld per hour, number of feet of pipe placed per day, feet of wire pulled, feet of reinforcing placed, yards of concrete poured, and similarly measureable parameters.

6. How stable is the labor force, that is, once employed on a particular project, what is the percentage that leave on their own before completion of their work tasks?

7. In general, how skilled is the labor force and what on-the-job training is required for welders and others to render a creditable performance?

8. Do construction workers appreciate the difference between working on a power plant and building a warehouse? Are they motivated? Do they care about quality?

9. How adequate is construction supervision and management? How many years of supervisory experience does the average foreman, superintendent, project manager have? Do they feel it is enough? What training programs are available to supervisory personnel and how many avail themselves of such training opportunities?

10. How do you find the quality of components, such as valves, instruments, pipe, compressors, etc.? How many rejections are made in the field -- many or few?

11. How should the design of the control room be improved?

12. Should there be a standard design for control rooms and for the layout of control panels?

13. What are the advantages and disadvantages of standardizing the design of nuclear power plants? What would be the attitude of equipment manufacturers and plant constructors to standardization?

14. What design changes or procedural changes would you suggest to improve the defense against the lesser accidents that were referred to in the testimony?

15. Discuss the design changes or modifications and the procedural changes that you would recommend to minimize the frequency of occurance and the speed of development of the operational pertubations that were mentioned in the testimony.

16. List your recommendations for research and development activities that would improve the safety of nuclear power plants.

17. What are the present deficiencies in nuclear power plant safety systems?

18. Provide details of the means of simplifying the interpretation of instrument readings, together with your recommendations for displaying abnormal readings.

19. Discuss and provide recommendations for means of using computers or microprocessors to enhance the power plant operator's ability to recognize abnormalities.

20. Discuss the need for a "Swat Team" composed of people from industry, the utilities, NRC, etc.

21. Provide details of the improvements in communications and the man-machine interface that were suggested in the testimony.

STONE & WEBSTER ENGINEERING CORPORATION

7315 WISCONSIN AVENUE, SUITE 332 WEST

BETHESDA, MARYLAND 20014

BOSTON
NEW YORK
CHERRY HILL, N.J.
DENVER
CHICAGO
HOUSTON
PORTLAND, OREGON
SAN DIEGO
WASHINGTON, D.C.

DESIGN
CONSTRUCTION
REPORTS
EXAMINATIONS
CONSULTING
ENGINEERING

13 August 1979

Mr. Stephen Lanes
Staff Director
Subcommittee on Energy Research and Production
Committee on Science and Technology
Room B-374
Rayburn House Office Building
Washington, D. C. 20515

Dear Steve:

Enclosed are the responses to the supplemental questions submitted to Bill Kennedy following your hearings on nuclear power plant safety. I apologize for the delay in our response, but I am sure you are aware how busy our people have been this summer.

Regards,

Gerald C. Fain
Assistant Manager -
Washington Operations

Enclosure

August 9, 1979

ANSWERS TO ADDITIONAL QUESTIONS FROM
SUBCOMMITTE ON ENERGY RESEARCH AND PRODUCTION
HEARINGS ON NUCLEAR POWER REACTOR SAFETY
W. J. L. Kennedy

1. Question:

What is your professional opinion of the performance of design engineers in general (not related to Stone and Webster)? What are their attitudes regarding attention to detail, personal responsibility, outside study to maintain technical competence, thirst for perfection, etc.?

Answer:

Referring to "design engineers" as professional engineers I consider them as a class with the highest professional standards of competency. Non-achievers are weeded out of demanding disciplines, such as nuclear, early and easily. By their very nature, engineers concentrate on details, are proud of their personal design contributions and are always searching for better ways of doing things -- perfecting their work. Many have advanced degrees in engineering and in related fields; many obtained by attending college nights.

2. Question:

What is your opinion of design supervisors? Do they check the work of their engineers and designers? How carefully? Are they timid, or do they criticize? Do they develop their personnel into better engineers?

Answer:

By "design supervisor," I will refer to lead engineers on projects and engineering supervisors in technical engineering support groups; first line engineering supervision. At Stone & Webster these individuals are responsible for supervising and checking the work of their engineers or designers. Where calculations are long or complicated, they can delegate that responsibility. In any event, the checks made of safety systems are documented and audited. A formal design control program is required by Criterion III, to Appendix B, 10 CFR 20 which establishes the requirements for company Quality Assurance Programs. Our Engineering Assurance Division documents company procedures and provides periodic and independent audits of the checking and other design control procedures. These audit findings are reported to me directly, and assure us of the supervisory adequacy of first line supervision. In any event, checks are careful and most engineers take pride in finding possible errors or omissions, and having them corrected. Few engineers are timid or fail to criticize their peers. This intimate working relationship leads to a rapid transfer of knowledge and mutual professional development is a by-product.

3. Question:

If these questions seem out of place, why was there no way of verifying that a major valve was open or seated on the primary loop of Plant No. 2 at TMI when an open valve could, in itself, constitute a LOCA?

Answer:

There is no incompatibility between my response to Questions 1 and 2 and the question of pilot operated relief valve (PORV) at TMI-2. The engineers

recognized that relief valves have a history of sticking open on occasions or leaking. Design improvement has minimized but not eliminated such occurences. Therefore, an indirect valve position indication was provided to let the operators know if power was being applied to the valve - operator (solenoid); furthermore, a remotely operated block valve was provided upstream of the PORV so that the valve could be isolated should it leak or fail to close; last but not least, temperature and pressure measuring devices were placed downstream of the PORV to establish whether the valve was leaking or was in fact open. How the operator used this information and the actions taken are a matter of training and operational/maintenance quality assurance procedures. Admittedly, we are considering improvements to the quality of our PORV leakage detection devices so that they can give the operator unequivocal information.

4. Question:

What is your opinion of the effectiveness of the NRC during the design phase? Do they do complete detailed design reviews? Do they have adequate personnel for this? Are they sincere? Do they interact constructively with the utilities, the equipment manufacturers and design engineers? Are they procedure oriented or plant oriented?

Answer:

The NRC is quite effective during the design phase. However, their reviews are pretty much confined to assuring conformance with several hundred regulatory guides and regulatory branch positions. TMI-2 demonstrates that the NRC has probably been overconcerned with the maximum credible accident which might never occur, rather than smaller and more likely accidents. Considering that the major initiating actions of the TMI-2 accident stemmed primarily from operations and maintenance shortcomings, this in itself speaks well of NRC involvement during the design phase. Even though the NRC has inadequate personnel to be completely responsive to the schedular requirements of design review, their personnel are qualified and sincere, and they try to act constructively with the utilities, equipment manufacturers, and design engineers. There is a need that NRC design reviewers be more familiar with nuclear plant operation and consider their reviews within that context.

5. Question:

What is your opinion of the construction workers? Specifically, do they want to work? For power plant construction, what is the productivity of labor today vs 1969 in such measureable items as inches of weld per hour, number of feet of pipe placed per day, feet of wire pulled, feet of reinforcing placed, yards of concrete poured, and similarly measureable parameters.

Answer:

A cross-section of the construction work force engaged on nuclear plant construction would not vary significantly from a cross-section of the work force in general. There are many highly qualified workers who take a great deal of pride in their work; a large portion of the work force are qualified craftsmen who are primarily interested in performing good work for a good wage and a smaller portion of the work force whose performance is less than desired. Unfortunately, the influences outside the construction workers' control such as holding for an inspection, rejection of what the worker considers good work because of "paper work" problems, and changes to installed work, all of which are prevalent in nuclear construction today, have an adverse effect on the best workers.

To compare the man-hours per unit of work today vs the man-hours per unit of work in 1969 and call it differences in labor productivity would be unfair to today's work force. The man-hours per unit of work today would be much higher. Some of the major contributors to the increase in today's man-hour rates are:

- Increases in inspection activity, including inspection hold points where work cannot continue until released by the inspector. In construction a work task is normally performed completely by the same workers so all inspections disrupt the work process vs manufacturing where frequently the inspections can be performed between activities in the manufacturing process.

- Increases in the complexity of installation. For example, reinforcing steel installation to satisfy increased loadings has increased the installation difficulty due to the density of rebar per unit volume of concrete.

- Time expended to satisfy requirements for items like weld rod control and random metal products identification increases the ratio of waiting time to direct work time.

- Installation of equipment later than the optimum time because of late delivery affects the difficulty of installation.

- Late installation or rework to satisfy regulatory guides and changing codes. For example, pipe whip restraints, jet impingement and cable separation.

- The addition of systems and expanding existing systems in structures already constructed reduces efficiency because of tight working conditions.

Items like the above have increased the man-hours per unit of work by as much as 5 to 10 times, but do not indicate a decrease in labor productivity per se. The increase in scope of work today due to additional systems and expanded existing systems has naturally added many man-hours to the total craft man-hours and this is often misinterpreted as reduced productivity.

6. Question:

How stable is the labor force, that is, once employed on a particular project, what is the percentage that leave on their own before completion of their work tasks?

Answer:

The stability that does exist in the construction labor force is between the individuals and their union, not between individuals and contractors or individuals and projects. The stability on a given project is very much dependent on the construction marketplace in the project area and to a lesser degree on the rest of the country.

If the work in the area is slow, then obviously the project work force will be very stable. Frequently there is other work available so the workers will switch projects because of such things as extended work week, shorter commute or to get away from the impositions of nuclear work. Due to the length of nuclear projects an individual may leave and return several times during the life of the project. The percentage of workers that stay through a project would be influenced by the above but 20% would be a realistic number. The turnover of the remaining 80% can vary from 300% to 900%.

Often a nuclear project requires a larger work force than is available in the area. This is especially true in the mechanical and electrical crafts with qualified welders having the greatest shortfall. This shortfall requires the use of travelers from other areas. The turnover in travelers is usually quite great because when work picks up in their home area they return home. This turnover is especially detrimental to overall man-hours when welders are involved because of qualification requirements, that is, time each welder spends in the test booths. There is a small percentage of travelers that move from overtime job to overtime job and will only work a normal work week project waiting for another overtime project to commence.

The climatic conditions in the project area influence the stability of the work force. The more adverse the weather is for construction activities the more stable the work force will be in the latter stages of a project. The structures are normally closed in at this stage and the workers are rarely sent home with just show-up time during bad weather.

The Nuclear Power Construction Stabilization Agreement should help to reduce the number of travelers on a project and, therefore, the turnover because of provisions to use nonjourneymen such as apprentices, trainees, helpers or probationary employees. It is expected that these workers will come from the project area and will perform many of the support craft activities relieving the available journeyman to perform the activities requiring the greatest skills.

7. Question:

In general, how skilled is the labor force and what on-the-job training is required for welders and others to render a creditable performance?

Answer:

The skill of the work force that comes from the labor organizations is generally very good. The apprentice programs produce competent journeymen. However, the unique requirements of nuclear projects do require special training or orientation for the work force. This training varies from formal classroom type training to informal gang box instructions. An effort is made to ensure that employees attend an orientation program on quality requirements as well as the details on documentation, hold points, etc., in order to obtain support for the programs. Specific training is given in specification requirements to ensure conformance to requirements. The amount of training required will vary with the complexity of tasks to be performed.

The shortage of welders experienced on many projects has precipitated various training programs. This varies from on site training to upgrade welders already employed to offsite welding schools to train welders for the project. This is in addition to the programs above which would explain such tasks as inspection interface, weld rod control, and transfer of heat batch numbers.

8. Question:

Do construction workers appreciate the difference between working on a power plant and building a warehouse? Are they motivated? Do they care about quality?

Answer:

Construction workers definitely appreciate the differences between working on a power plant and building a warehouse. To them, the biggest difference is in inspection and documentation. A weld is still a weld, reinforcing steel 6" on centers is still reinforcing steel 6" on centers, and terminating a cable is still terminating a cable. The majority intend to do quality work.

They may, however, have developed practices over the years that they felt were acceptable and were not in violation of the specifications to which they were working. The specifications on nuclear work are more detailed and are being interpreted more stringently by the quality control and quality assurance groups. These controls and requirements often result in what the craftsman believes to be quality work being rejected.

Using welders as an example, the tendency on nuclear work in the interpretation of a radiograph is to reject a weld if there is the slightest question of acceptability. This is understandable on the interpreter's part because the radiograph is subject to interpretation later by others; however, it is very difficult for the welder, who normally performs his own repair, to understand when he believes the weld was good. The negative result of this is that the workers consider that people that do not know their business as well as themselves, namely inspectors and contractor management, are telling them how to do their work. The solution to this of course is the training and orientation programs discussed in Question 7.

Again it must be remembered that the worker's primary allegiance is to his labor organization and not to a contractor or project. Seniority and security have no special meaning on a construction project. When there is plenty of work in an area, being terminated or resigning from a given project holds no special meaning to a worker who recognizes he can be working on some other project the next morning for the same wages and conditions. This makes motivation of the worker very difficult except by appealing to his personal pride and pride in his workmanship.

9. Question:

How adequate is construction supervision and management? How many years of supervisory experience does the average foreman, superintendent, project manager have? Do they feel it is enough? What training programs are available to supervisory personnel and how many avail themselves of such training opportunities?

Answer:

As the case of the construction work force in general, there is frequently an insufficient number of experienced foremen and general foremen in an area to satisfy requirements on a nuclear project. This is complicated by using travelers as foremen and general foremen causing problems with the local work force and the probability of higher turnover in travelers makes them less desirable in supervisory roles.

Contractual agreements frequently do not allow paying more to foremen and general foremen than agreed in the local bargaining agreements. The difference in pay in many cases has not been increased in proportion to the journeymen rate and there is no monetary incentive to take on the added responsibilities. This has been recognized in the industry and is being corrected. Under the Nuclear Power Construction Stabilization Agreement this can be taken care of in the Project Labor Plan.

This first level of supervision, foremen and general foremen, has direct contact with the crafts and, therefore, the greatest influence on such items as productivity and compliance with the special nuclear construction requirements. Recognizing the potential shortage of this key element to a successful construction operation, the development of foremen and general foremen must start with the beginning of crafts activities. Even though this may result in a higher than normal ratio of supervision to work force it will allow on-the-job training for foremen and general foremen. The training coupled with a larger pay differential incentive can be a positive influence toward a motivated work force.

The first level of management supervision historically came from the crafts. Many now are engineers. The tremendous amount of paper work and documentation required of management supervision is discouraging craft personnel to switch into management. Fringe benefits once considered an incentive to take management positions now being equal to or better in the labor organizations, will further discourage craft personnel from supervisory positions. Ideally, a mix of former craft and engineers should continue to exist so that hands on experience from the crafts will complement the technical background of the engineers.

Site management personnel are often younger than might be expected for projects the magnitude of nuclear projects. These younger site managers entered the nuclear construction era at mid level supervisory positions and have developed through the levels of supervision parallel with the increase complexity and regulatory climate of nuclear construction. Therefore, they are usually well qualified to manage projects.

10. Question:

How do you find the quality of components, such as valves, instruments, pipe, compressors, etc.? How many rejections are made in the field -- many or few?

Answer:

Overall, the quality of nuclear grade components purchased by Stone & Webster have been and continue to be good to excellent. The rejects we experience arise for the most part for the lack of quality assurance records and, in some instances, shipping damage. Very few components are rejected for reasons of non-compliance with codes or requirements of the design specifications.

11. Question:

How should the design of the control room be improved?

Answer:

The design of many control rooms could be improved by recognizing that most control functions fall into three (3) categories. The day-to-day operations, the seldom operated non-safety controls, and the engineered safety features or emergency controls.

The control room layout should be designed along these lines and the control panels separated accordingly.

Traditional designs group controls by equipment or fluid systems and as a result the main control boards are often crowded with instruments and devices that are used only under special limited conditions.

12. Question:

Should there be a standard design for control rooms and for the layout of control panels?

Answer:

A completely standardized design is impractical because of differences in reactor types, site specific systems, and equipment details.

However, well considered and standardized principles of layout and design should be established, so that operators (or observers from regulatory bodies) can quickly feel at home in any plant and reactor plant simulator training can be facilitated.

13. Question:

What are the advantages and disadvantages of standardizing the design of nuclear power plants? What would be the attitude of equipment manufacturers and plant constructors to standardization?

Answer:

It is impractical to fully standardize the design of nuclear power plants. Each plant site has different requirements that must be met, e.g. size, soil conditions, ambient air and cooling water temperatures exclusion distance requirements, etc.

We believe, however, that the current NRC concepts of plant standardization are good and Stone & Webster led the engineer-constructor industry by having the first such standard design approved for the balance of plant.

Almost all aspects of standardization are advantageous and the advantages include the following:

- Standard designs provide more time for thought to determine best arrangement and system design than is usually available in a custom design.
- The design is pre-licensed. Because of the limited number of such designs the NRC review can be more comprehensive, thorough, and timely.
- Universal siting. The designs can be suitable for founding on rock or soil in a wide variation of site locations, including seismic and long-term meteorological conditions that envelope most potential U.S. sites.
- Shorter project schedule -- this is an economic advantage.
- More efficient manpower use by owner and engineer-constructor. Again, the design reviews can be more comprehensive, thorough, and timely. More time can be spent reviewing feedback information impacts from operating plants.
- Increased schedule confidence -- this is an economic advantage, however, it permits NRC to better plan its manpower requirements as well.
- Increased plant availability. In essence, this stems from increased plant reliability, which is a good measure of improved safety.

As your recognize, each reactor manufacturer has recognized the importance of standardizing his own nuclear steam supply system (NSSS) to provide for a minimum number of variations in size. To have all reactor manufacturers conform to a single design would probably violate anti-trust statutes, but more importantly eliminate the competitive drive to achieve product superiority as pertains to reliability and safety, exclusive of cost. With the large variation of balance-of-plant equipment requirements due to site related variables mentioned previously, I believe it would be impractical

to standardize components other than those in the NSSS.

14. Question:

What design changes or procedural changes would you suggest to improve the defense against the lesser accidents that were referred to in the testimony?

Answer:

See answer to 15.

15. Question:

Discuss the design changes or modifications and the procedural changes that you would recommend to minimize the frequency of occurence and the speed of development of the operational perturbations that were mentioned in the testimony.

Answer:

The design approach, and procedures for examination and implementation, would be to postulate a wide variety of minor failures and then to postulate what coincidental failures of equipment or judgment could escalate the original failure, and thus illuminate areas where a change in design, greater redundancy, greater separation or isolation of equipment, would obviate escalation. We can provide no pat formula; it is rather a matter of tedious, exhaustive, and largely repetitive series of examinations.

16. Question:

List your recommendations for research and development activities that would improve the safety of nuclear power plants.

Answer:

The research and development activities that would improve the safety of nuclear power plants are in the following areas:

- Hydrogen generation and behavior under accident conditions.
- Visual and acoustical surveillance for reactor containment and auxiliary buildings.
- Environmental qualification of instrumentation for a broad spectrum of accident conditions.
- Computer simulation of nuclear and non-nuclear systems to provide dynamic response information to postulated challenges to safety and non-safety systems and components.
- Reliability of electrical power supply systems and configurations for emergency power.
- Development of human engineering criteria for control room design.

- o Development of seismic qualification criteria.
- o Materials research and development, including the preparation of up to date documentation of the ability of materials and electronic components to withstand radiation exposure.
- o Improvements in the methodology for the analysis of the relationships between pressure and local effects near high energy pipe breaks.

17. Question:

What are the present deficiencies in nuclear power plant safety systems?

Answer:

Some deficiencies in nuclear power plant safety systems which should be corrected are as follows:

- o Control room engineering, including improvements in human engineering the man-machine interface.
- o Too many alarm indications for an operator to cope with. Consider providing cathode ray tube displays of highest priority information.
- o Improved control room indication of bypassed and inoperable equipment.
- o More emphasis on dedicated safety systems with clear separation of interactions between safety and non-safety systems.
- o More emphasis on the role non-safety systems can play in preventing and mitigating the consequences of small loss of coolant accidents.
- o Improvements in the environmental qualification of instrumentation for service under a broad spectrum of accident conditions.
- o NRC seismic restraint requirements impose rigidity on components which result in thermal stresses during operation which approach allowable thermal stresses. Thus an attempt to address extremely unlikely seismic conditions increase the probability of failure under normal operating conditions.
- o NRC insistance on the demonstrated ability to remove iodine from the containment atmosphere of pressurized water reactors introduces caustic additives to the containment spray system. TMI-2 experience indicates that very little iodine remains airborne. Since caustic sprays are not required and their use degrades safety systems, use of fan coolers should be in lieu of sprays.
- o Development of design criteria related to single, multiple, and common mode failure.
- o Improvements to instrumentation which assures the reactor operator that the core is covered at all times.

18. Question:

Provide details of the means of simplifying the interpretation of instrument readings, together with your recommendations for displaying abnormal readings.

Answer:

Several means of simplifying instrument readings have been proposed and the ones that appear most promising are as follows:

- Design instrument components so that during normal system operation the instrument indicators are all pointing in the same general direction and an abnormal condition is quickly recognized, not by an absolute value, but by the semaphore change of the indicator.

- Provide cathode ray tubes (CRT) similar to a TV screen to display instrument information only on demand or automatically when there is a deviation from normal. If system conditions are stable, the CRT should remain blank.

  To quickly recognize abnormal conditions, the plant annunciator alarm window or light should be adjacent to or part of the instruments that monitor the fault.

19. Question:

Discuss and provide recommendations for means of using computers or microprocessors to enhance the power plant operator's ability to recognize abnormalities.

Answer:

Computers have been used by some industries to aid the operator's ability to recognize abnormalities but their use has been slow to penetrate the electric utility industry because of early experiences with the high failure rate of solid state devices.

To use computers in the nuclear industry it would be necessary to isolate the safety related information from the non-safety related plant computer. The addition of isolators will degrade, to some degree, the reliability of the safety system and the NRC requires a documented analysis to prove that the safety system has not been degraded below an acceptable limit. For this reason the utilities have been slow to adopt computers in safety systems. Furthermore, such computers could not be seismically qualified -- a prime requirement for safety systems.

With the rapid improvements and price reduction in mini-computers and micro processors, the industry may now be able to use several dedicated mini-computers and eliminate the need for isolation.

20. Question:

Discuss the need for a "Swat Team" composed of people from industry, the utilities, NRC, etc.

Answer:

We have participated with industry in the preparation of improved emergency response plans. The attached outline of such a plan was prepared by the Atomic Industrial Forum (AIF) and was just recently released for industry comment. The need for an Emergency Response Team or "Swat Team," and how such a team fits into updated emergency preparedness concept stimulated by TMI-2 can be best discussed in the context of the recommended plan. Should you have any further questions on the plan, the Stone & Webster member of the AIF Emergency Preparedness Subcommittee would be pleased to answer them.

21. Question:

Provide details of the improvements in communications and the man-machine interface that were suggested in the testimony.

Answer:

The testimony was meant to suggest that the most recent developments of TV be incorporated for remote surveillance of containment and other areas not readily accessed, or which might seem inaccessible.

DON FUQUA, FLA., CHAIRMAN
ROBERT A. ROE, N.J.
MIKE MC CORMACK, WASH.
GEORGE E. BROWN, JR., CALIF.
JAMES H. SCHEUER, N.Y.
RICHARD L. OTTINGER, N.Y.
TOM HARKIN, IOWA
JIM LLOYD, CALIF.
JEROME A. AMBRO, N.Y.
MARILYN LLOYD BOUQUARD, TENN.
JAMES J. BLANCHARD, MICH.
DOUG WALGREN, PA.
RONNIE G. FLIPPO, ALA.
DAN GLICKMAN, KANS.
ALBERT GORE, JR., TENN.
WES WATKINS, OKLA.
ROBERT A. YOUNG, MO.
RICHARD C. WHITE, TEX.
HAROLD L. VOLKMER, MO.
DONALD J. PEASE, OHIO
HOWARD WOLPE, MICH.
NICHOLAS MAVROULES, MASS.
BILL NELSON, FLA.
BERYL ANTHONY, JR., ARK.
STANLEY N. LUNDINE, N.Y.
ALLEN E. ERTEL, PA.
KENT HANCE, TEX.
JOHN W. WYDLER, N.Y.
LARRY WINN, JR., KANS.
BARRY M. GOLDWATER, JR., CALIF.
HAMILTON FISH, JR., N.Y.
MANUEL LUJAN, JR., N. MEX.
HAROLD C. HOLLENBECK, N.J.
ROBERT K. DORNAN, CALIF.
ROBERT S. WALKER, PA.
EDWIN B. FORSYTHE, N.J.
KEN KRAMER, COLO.
WILLIAM CARNEY, N.Y.
ROBERT W. DAVIS, MICH.
TOBY ROTH, WIS.
DONALD LAWRENCE RITTER, PA.

COMMITTEE ON SCIENCE AND TECHNOLOGY
U.S. HOUSE OF REPRESENTATIVES
SUITE 2321 RAYBURN HOUSE OFFICE BUILDING
WASHINGTON, D.C. 20515

HAROLD A. GOULD
EXECUTIVE DIRECTOR
PHILIP B. YEAGER
REGINA A. DAVIS
JAMES E. WILSON
WILLIAM G. WELLS, JR.
RALPH N. READ
JERRY STAUB
JAMES W. SPENSLEY
STEPHEN LANES
IAN W. MARCEAU
MINORITY STAFF DIRECTOR:
PAUL A. VANDER MYDE

JUN 07 1979

Dr. Chauncey Kepford, Director
Environmental Coalition on Nuclear Power
433 Orlando Avenue
State College, PA 16801

Dear Dr. Kepford:

Thank you for providing testimony at our subcommittee hearings on Nuclear Power Plant Safety on May 22, 1979. During these hearings you indicated that you would provide the subcommittee with responses to a number of questions, together with other additional information. Enclosed is a list of questions; we would appreciate receiving your response by June 25, 1979.

Thank you for your cooperation.

Sincerely,

MIKE McCORMACK
Chairman, Subcommittee on
Energy Research and Production

Enclosure

SUBCOMMITTEE ON ENERGY RESEARCH AND PRODUCTION

HEARINGS ON NUCLEAR POWER PLANT SAFETY

ADDITIONAL QUESTIONS FOR DR. CHAUNCY KEPFORD

1. What role should your institution play in improving nuclear power plant safety?

2. List the research and development programs that you would recommend to improve nuclear power plant safety.

3. List your recommendations for changes in the design and layout of control rooms.

4. Should there be a standard design for control rooms and for the layout of control panels?

5. Provide a list of recommendations for improving the safety of nuclear power plants.

6. Is there a need to improve the radiation monitoring facilities for nuclear power plants? List your recommendations.

7. In your testimony you stated "I have been lulled into this false sense of security about nuclear reactors." Please provide more detailed background on this statement.

8. Your testimony indicates that until the time of the Three Mile Island accident you felt a sense of security about nuclear power plant operations. Is this correct?

9. Provide a list of the locations at which you believe radiation monitoring equipment was installed and the locations at which measurements were made during the Three Mile Island accident. Provide the following reference data:

   (a) The source of your information.
   (b) The Agency responsible for the equipment.
   (c) The time and date at which measurements were made.
   (d) The "end use" of the data.

10. Your testimony indicated that you believe that the Nuclear Regulatory Commission was dishonest in the use of certain data. Please provide references to support your view.

11. In reply to a question by Congressman Walker, you said that you would provide him with calculations that you had made of the potential fatalities caused by the Three Mile Island accident. Please supply these calculations together with an explanation of your treatment of the data in question.

12. Were the relatively long-range radiation measurements, made by helicopter survey, satisfactory? Provide a brief explanation.

13. Did the "fall-off" of dose with distance, suggested by DOE measurements, satisfy you that doses do decrease with distance?

SUBCOMMITTEE ON ENERGY RESEARCH AND PRODUCTION
HEARING ON NUCLEAR POWER PLANT SAFETY
ANSWERS OF DR. CHAUNCEY KEPFORD

1. [What role should your institution play in improving nuclear power plant safety?]

The role of an organization such as the Environmental Coalition on Nuclear Power (ECNP) in improving reactor safety is ambiguous to say the least. This ambiguity stems partially from the belief shared by the vast majority of our members that the only known way to make any nuclear power plant "safe" is to permanently remove all fuel from the reactor so that it can never be made critical. Of course, this does not solve any of the numerous other unsolved problems of the entire nuclear fuel cycle. However, the question addressed only reactor safety.

The other aspect is that ECNP feels that we have an obligation to the public that requires us to enter the legal process of the licensing of nuclear power plants in an adversary role even though we understand from long personal involvement that this licensing process is totally biased; that the rules are created to favor the result that the utility, in conjunction with the NRC Staff, desires; and that this result will be sustained by the Licensing Boards, the Appeal Boards, and, on the advice of the NRC Staff, the Commissioners themselves. These parties to the proceedings know in advance the outcome of any hearings: the record to date shows a monotonous record of success that is unblemished by the denial of a single commercial license application. In spite of this overwhelming bias, we still feel it is our moral obligation to enter this biased forum and do our best to try to make reactors, and the rest of the fuel cycle, as safe as is possible for this generation of humans and all subsequent ones as well. This latter point has yet to penetrate the consciousness of either the NRC, the nuclear industry, or the supporters of either.

2. [List the research and development programs that you would recommend to improve nuclear power plant safety.]

Short of the defueling suggestion made in the answer to question 1, which would require no R and D at all, and would have the enormously beneficial side effect of placing a limit on the amount of radioactive wastes to be disposed of in some yet undetermined way in some yet to be determined place, I would recommend the immediate placing of all operating reactors in cold shutdown until reactor safety becomes an experimentally verified reality. This would require a series of experiments to show that safety systems are capable of carrying out their designed functions under realistic operating conditions. If this verification means that a 1000 MW(e) reactor--or even 2, 3, or 4 or more reactors--must be tested to destruction, then that must be done, in my opinion.

If this is too drastic or dangerous a measure for the totally irresponsible nuclear industry,(i.e., not responsible for their accidents, wastes, abandoned facilities, etc.), then this industry should not be allowed to determine its safety record by using the public as a group of unwilling, uninformed, and unprepared guinea pigs, a practice uniformly followed, from uranium mining and milling through radioactive waste management, and, most unconscionably at Three Mile Island. To date there has not yet been offered a rational, reasoned explanation of why the corporations which in reality consist of a file of papers, receive more protection from the failures of

nuclear power than do the lives and properties of members of the public and all of their descendants who are affected by the nuclear power failures. An area "the size of the state of Pennsylvania" (Working papers, 1964-65 WASH-740 update, document 92, page 4) to be placed at risk of radioactive contamination is far too great a national asset to jeopardize for the alleged marginal benefit of allegedly cheaper electricity. Here I can only repeat the words of Dr. Clifford Beck, chairman of the study groups which prepared WASH-740 and its 1964-65 revision, in a letter to Congressman Chet Holifield, Chairman of the Joint Committee on Atomic Energy, May 18, 1965

> there is no objective, quantitative means of assuring that all possible paths leading to catastrophe have been recognized and safeguarded or that the safeguards will in every case function as intended when needed.
>
> Here is encountered the most baffling and insoluble enigma existing in our technology: it is in principle easy and straightforward to calculate potential damages that might be realized under such postulated accident conditions; there is not even in principle an objective and quantitative method of calculating probability or improbability of accidents or the likelihood that potential hazards will or will not be realized.

Nothing has occurred since 1965 to cast any doubt on Dr. Beck's words.

3. [List your recommendations for changes in the design and layout of control rooms.]

If the reactors are to be defueled, as I believe they must be, no control room, or control room changes, would be necessary.

4. [Should there be a standard design for control rooms and for the layout of control panels?]

Again, no control rooms at all would be necessary if the reactors are to be defueled and commercial radioactive waste production terminated. However, even if the decision is made to place public safety in a position subordinate to corporate profits, standardized control rooms would be a difficult goal to realize, because, by necessity, the controls for a BWR must be at least somewhat different from those of a PWR, and even among the PWRs of the three U.S. manufacturers, there would be features found on one type which would not be found on others.

But the problem of standardization is even more complex, because to accept a "standardized" design for even one manufacturer would require the assumption, still not the experimentally determined fact, that all design problems have been identified in advance of standardization and have been remedied. We have no assurance, as should have been learned from the TMI-2 accident, that all such design deficiencies have indeed been identified. Control rooms are, in this regard, just an extension of a hazardous technology not yet understood.

5. [Provide a list of recommendations for improving the safety of nuclear power plants?]

The only way to insure that the worst imaginable reactor accidents will not occur is to insure the possibility of such an occurrence is prevented. The only known, as opposed to estimated, projected, calculated, hoped for, or fantasized, way to do this is to shut them all down, permanently. At the present time, we must assume that the probability that all design defects in the presently operating nuclear reactors (and their associated control rooms) have been identified is zero.

The present method of assuring safety as practiced by the NRC is that of edict and speculation. The edict is in the form of an NRC rule to prevent public interest intervenors, like ECNP, from litigating safety issues in reactor licensing proceedings. The speculation is the extrapolative kind of mathematical calculation, model creation, simplification, and approximation necessary, in the eyes of the NRC, to support the edict. An example is the ECCS problem, where litigation of ECCS issues was terminated by the issuance of an edict incorporated into the rules of the NRC. Such practices, as the issuance of edicts by the NRC, are effective means of preventing litigation and public discussion of important safety issues, but there is no assurance that the edict, or the speculation upon which it is based, is effective at preventing accidents like TMI-2.

6. [Is there a need to improve the radiation monitoring facilities for nuclear power plants? List your recommendations.]

The environmental monitoring (and accident monitoring) around nuclear power plants is abominable. It is based on two unsupported assumptions:

(a) all utilities operating nuclear power plants can be trusted to furnish accurate and complete monitoring data,and,
(b) accidents won't happen.

To avoid the classical "fox guarding the chicken house" situation, it would be advisable to have some agency other than the utility or the NRC perform the all-important job of environmental monitoring.

Of course, if there were really a serious intent behind environmental monitoring, other than simply having a utility employee waving data in the air to show that no radioactive materials escaped a particular plant it would begin with a thorough baseline epidemiological study of the people within, say, a thirty mile radius of the proposed facility prior to the operation of the facility.

The TMI-2 accident, if nothing else, showed just how poorly agencies of the federal government--even agencies having three decades of experience with environmental radiation monitoring--can collect data when an accident does happen. About the only way the monitoring could have been worse would have been for the only monitoring to have been that of Metropolitan Edison Company.

To resolve these problems, I suggest that some agency not dependent on the continuance of nuclear power--as are the NRC, DOE, AIF, EEI, EPRI, or the particular utility--do the environmental monitoring. A likely candidate would be some state agency, financed by a state tax on nuclear facilities.

This suggestion assumes that the ECNP recommendation of a complete and permanent shutdown of all commercial reactors is not accepted.

Monitoring in the case of accidents should be done with the idea in mind that accidents happen at times when they are not expected. The monitoring capability should extend out to at least fifty miles, and the monitoring devices should be capable of detecting, on an isotopic basis, beta and gamma radiations from both gaseous and particulate sources. In addition, these, and the normal environmental monitors, should be distributed in numbers in the hundreds, thousands, or even higher numbers, according to population densities, so that the members of the public at risk due to this inherently dangerous technology can be promptly and fully informed of the actual risk they bear and the actual radiation doses they receive.

7. [In your testimony you stated "I have been lulled into this false sense of security about nuclear reactors." Please provide more detailed background on this statement.]

There is little more to be said. Core meltdowns have not occurred on a monthly or annual basis. But the present course of action, which is geared to react only after the fact of an accident, appears to guarantee that someday--maybe next week, next month, next year, or whenever--an area "the size of the state of Pennsylvania" will indeed be lost.

Perhaps this Committee should hold hearings on the economic impact to the U.S. if, say, Pennsylvania had to be evacuated for as long as four strontium-90 half-lives due to a reactor accident. The economic impact of such an accident would be catastrophic to the U.S. economy, perhaps even worse than that of a limited nuclear war. Yet this "war" will have come from within, under the guise of "progress" or simply the illusion of cheaper electricity.

8. [Your testimony indicates that until the time of the Three Mile Island accident you felt a sense of security about nuclear power plant operations. Is this correct?

As I stated in my testimony, this false sense of security was in part based on the belief that when a serious reactor accident did happen, it would be in someone else's backyard. I was mistaken. I made a serious mistake. However, I have learned a lot from this tragic experience:

None of the assurances of "safe, clean, economical" nuclear power will ever be believed again.

9. [Provide a list of the locations at which you believe radiation monitoring equipment was installed and the locations at which measurements were made during the Three Mile Island accident. Provide the following reference data:

(a) The source of your information.
(b) The Agency responsible for the equipment.
(c) The time and date at which measurements were made.
(d) The "end use" of the data.]

For parts (a), (b), and (c), these pieces of information about which I have been talking in reference to monitoring around TMI-2 during the period of the accident are all contained in the report entitled "Population Dose

and Health Impact of the Accident at the Three Mile Island Nuclear Station." by the Ad Hoc Population Dose Assessment Group, May 10, 1979.

The "end use" of this data was to present a rosy picture to the American people that the actual numbers of deaths attributable to the accident will be only about one death. However nice such rosy pictures are, in this case, the rosy picture is an enormous fabrication, distortion and misrepresentation of the actual population exposures. The "end use" boiled down to the public relations approach employed with the Reactor Safety Study, WASH-1400. There, the Study was widely hailed as the "last word" in describing how safe nuclear reactors were. In the end, its use was far more as a public relations gimmick rather than a scientific study. It has now been thoroughly debunked.

10. [Your testimony indicated that you believe that the Nuclear Regulatory Commission was dishonest in the use of certain data. Please provide references to support your view.

I have no "references" to provide such an answer. However, I do have my own analysis of the data which suggests that the analysis carried out in the report cited above was seriously flawed. If this were the first time such an analysis had ever been performed, fundamental defects might be expected.

Not only were the data which were used very deficient, but also the analysis used took no account of the serious deficiencies and internal inconsistencies of the data presented. In addition, the Ad Hoc group presented four analyses of the data and averaged them to arrive at a population dose estimate. Yet no distinction was made at all as to which were the better or the more applicable analyses to the real situation.

The data were deficient in a number of ways, at least including the problem that for all time periods discussed in the report, there were far too few dosimeter locations in operation to provide adequate monitoring data at any distance. But worse yet, there were none reported at distances beyond 15 miles for the Metropolitan Edison locations and none beyond 13.8 miles for the NRC locations. As a result, much valuable data was lost due to the refusal of the NRC to believe that measurable activity levels could occur at distances greater than these. This policy of "protection" by omission must be changed.

The Ad Hoc group made no attempt in their report to assess the validity or the quality of the data which they used in their analysis. In particular,

1. The Ad Hoc group failed to see the disparity between the 1978 Met. Ed. background data between the "indicator" and "control" locations. (Table 3-5). Nor did the group see any difference between the Met. Ed. data for the two kinds of dosimeters (Table 3-5 vs. Table 3-6). This problem was exacerbated by the fact that TMI-1 was in operation at this time contributing to the supposed "background."
2. The Ad Hoc group apparently did not notice that many of the dosimeter readings of Met. Ed. March 31, 1979, through April 6, 1979 period (Table 3-3) measured not only much lower levels of exposure than did NRC dosimeters at the same locations for about the same period (Table 3-4) but also many of these Met. Ed. dosimeters recorded exposures of even less than background. Yet these zero and negative values were used essentially unquestioningly.

3. The Ad Hoc group made no assessment of errors, systematic or otherwise, in its report. Nor was any mention made, in connection with the many consistently low Met. Ed. TLD readings, of the fact that the Met. Ed., and NRC, TLD's were read by Radiation Management Corporation, which is a wholly owned subsidiary of Philadelphia Electric Company. Neither the Ad Hoc group nor the NRC itself apparently saw any inherent conflict of interest in having such a subsidiary of another utility doing environmental monitoring for Metropolitan Edison, in addition to Philadelphia Electric itself. It is difficult to imagine how much more closely the chickens could be guarded by the foxes than here.

4. The Ad Hoc group made no attempt to insure that the dose vs. distance model that was used to calculate radiation exposures to populations outside the range of the available dosimeter readings actually fit the available data. This serious defect makes the DOE projections of doses in Appendix A of the report utterly meaningless. This is particularly important where, as with certain sectors (South, South West, and North West, North, and North East) the exposures for the period March 31 through April 7 (NRC data), simply did not decrease rapidly with distance, as the model requires. In fact, toward the Northwest, toward Harrisburg, the doses increased with distance from TMI-2. This observation is not reflected in the scanty, inconsistent Met. Ed. data.

5. In a meeting before the NRC Commissioners on Thursday, June 21, 1979, almost three months after the initiation of the TMI-2 accident, NRC personnel revealed for the firsttime (publicly) that all of the radiation monitors in the vent stack at TMI-2 went off scale on March 28, 1979. As a result, the Commissioners were told (See Washington Post, Friday, June 22, 1979, page 3) that exposure measurements were inconclusive that day. It truly taxes my mind to expect anyone to believe that that simple fact was not known to the Ad Hoc group when its "study" was being performed. This belated disclosure fuels my contention that the Ad Hoc report is nothing more than an intentionally dishonest, misleading public relations "soother" or "pacifier."

11. [In reply to a question by Congressman Walker, you said that you would provide him with calculations that you had made of the potential fatalities caused by the Three Mile Island accident. Please supply these calculations together with an explanation of your treatment of the data in question.

To date, the pressure of other obligations has not permitted me the luxury of sufficient time to carry out this important task. As soon as time does permit, these calculations will be forwarded to this Committee.

12. [Were the relatively long-range radiation measurements, made by helicopter survey, satisfactory? Provide a brief explanation.]

and

13. [Did the "fall-off" or dose with distance, suggested by DOE measurements, satisfy you that doses do decrease with distance?]

I have enclosed two graphs I have drawn using the data published in the Ad Hoc Population Dose Assessment Group report. Graph A is a plot of the total dose for the time period March 31 through April 7 taken from the Ad Hoc Group report, Table 3-4, which contains the dosimeter data of the NRC. Here I have summed the daily exposure recorded for each station for the entire time period and have plotted that total dose by sector as a function of the distance of the stations from TMI-2. Straight lines were drawn between the stations in each sector.Graph B contains data for additional sectors not shown on Graph A. On both graphs is a curved line which passes through circled points. This curve represents the doses that should have been observed at these distances in accordance with the dose vs. distance model that was used by the Ad Hoc group. The Ad Hoc group applied this model to extrapolate doses to the population in the 50-mile radius, beyond the 13.8 miles maximum distance where the NRC was actually recording doses, that is, where the lines end on graphs A and B.

I plotted these curves to see if the data fit the model in the region where recorded data did exist. While some of the lines on Graph A show at least some similarity to the theoretical curve, on Graph B the situation is very different. Here none of the sectors show the expected behavior.

These data suggest that the doses did not fall off with distance in at least some sectors as the DOE helicopter data suggest. Since the NRC dosimeters were placed (in principle) at or near ground level, where people tend to be found, these data are preferable to projections which are <u>not</u> supported by data. Lastly, the DOE measurements do not in any way satisfy me that the doses decrease with distance.

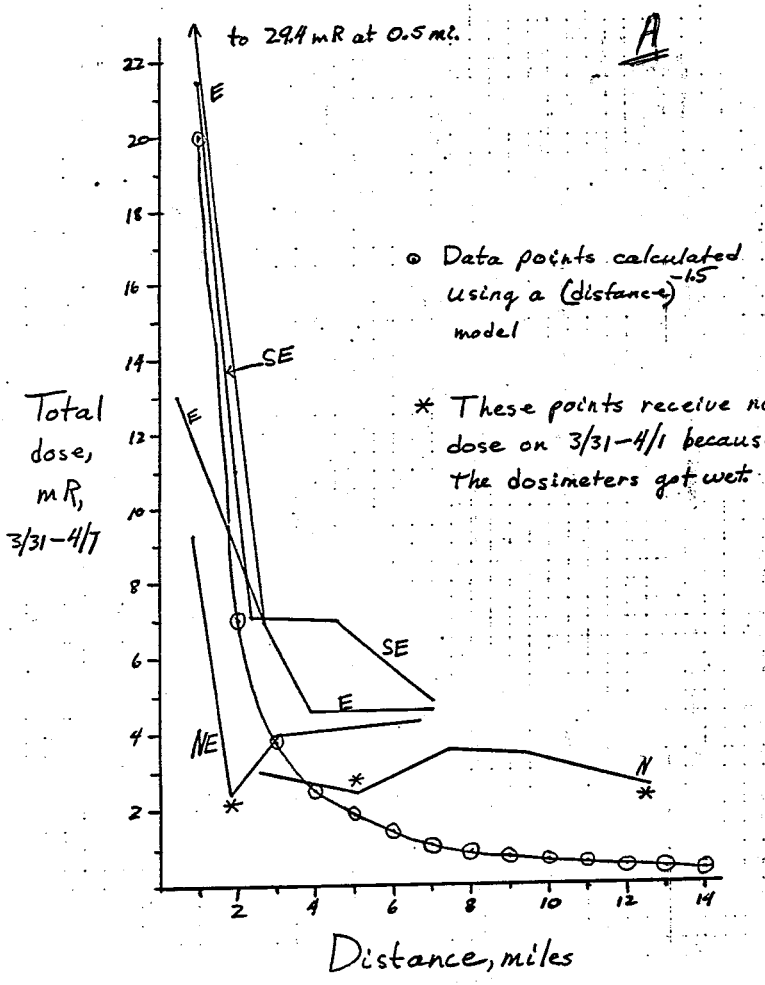
to 29.4 mR at 0.5 mi.
A
E
SE
E
SE
E
NE
N
o Data points calculated using a (distance)$^{-1.5}$ model
* These points receive no dose on 3/31–4/1 because the dosimeters got wet.
Total dose, mR, 3/31–4/7
22
20
18
16
14
12
10
8
6
4
2
2
4
6
8
10
12
14
Distance, miles

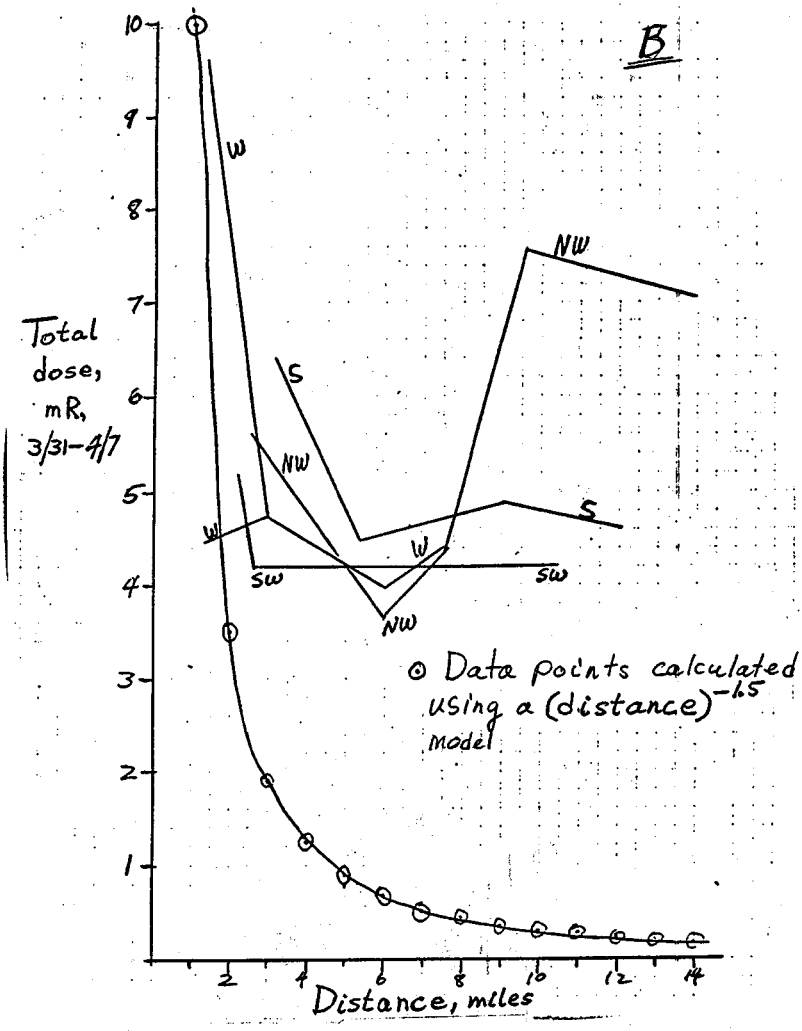
B
Total dose, mR, 3/31–4/7
10
9
8
7
6
5
4
3
2
1
W
NW
S
NW
W
S
W
SW
SW
NW
⊙ Data points calculated using a (distance)$^{-1.5}$ model
2
4
6
8
10
12
14
Distance, miles

DON FUQUA, FLA., CHAIRMAN
ROBERT A. ROE, N.J.
MIKE MC CORMACK, WASH.
GEORGE E. BROWN, JR., CALIF.
JAMES H. SCHEUER, N.Y.
RICHARD L. OTTINGER, N.Y.
TOM HARKIN, IOWA
JIM LLOYD, CALIF.
JEROME A. AMBRO, N.Y.
MARILYN LLOYD BOUQUARD, TENN.
JAMES J. BLANCHARD, MICH.
DOUG WALGREN, PA.
RONNIE G. FLIPPO, ALA.
DAN GLICKMAN, KANS.
ALBERT GORE, JR., TENN.
WES WATKINS, OKLA.
ROBERT A. YOUNG, MO.
RICHARD C. WHITE, TEX.
HAROLD L. VOLKMER, MO.
DONALD J. PEASE, OHIO
HOWARD WOLPE, MICH.
NICHOLAS MAVROULES, MASS.
BILL NELSON, FLA.
BERYL ANTHONY, JR., ARK.
STANLEY N. LUNDINE, N.Y.
ALLEN E. ERTEL, PA.
KENT HANCE, TEX.
JOHN W. WYDLER, N.Y.
LARRY WINN, JR., KANS.
BARRY M. GOLDWATER, JR., CALIF.
HAMILTON FISH, JR., N.Y.
MANUEL LUJAN, JR., N. MEX.
HAROLD C. HOLLENBECK, N.J.
ROBERT K. DORNAN, CALIF.
ROBERT S. WALKER, PA.
EDWIN B. FORSYTHE, N.J.
KEN KRAMER, COLO.
WILLIAM CARNEY, N.Y.
ROBERT W. DAVIS, MICH.
TOBY ROTH, WIS.
DONALD LAWRENCE RITTER, PA.

COMMITTEE ON SCIENCE AND TECHNOLOGY
U.S. HOUSE OF REPRESENTATIVES
SUITE 2321 RAYBURN HOUSE OFFICE BUILDING
WASHINGTON, D.C. 20515

HAROLD A. GOULD
EXECUTIVE DIRECTOR
PHILIP B. YEAGER
REGINA A. DAVIS
JAMES E. WILSON
WILLIAM G. WELLS, JR.
RALPH M. READ
JERRY STAUB
JAMES W. SPENSLEY
STEPHEN LANES
IAN W. MARCEAU
MINORITY STAFF DIRECTOR:
PAUL A. VANDER MYDE

MAY 07 1979

Dr. Saul Levine, Director
Office of Nuclear Regulatory Research
Nuclear Regulatory Commission
Washington, D.C. 20555

Dear Dr. Levine:

Thank you for providing testimony at our subcommittee hearings on Nuclear Power Plant Safety on May 22, 1979. During these hearings you indicated that you would provide the subcommittee with responses to a number of questions, together with other additional information. Enclosed is a list of questions; we would appreciate receiving your response by June 25, 1979.

Thank you for your cooperation.

Sincerely,

MIKE McCORMACK
Chairman, Subcommittee on
Energy Research and Production

Enclosure

SUBCOMMITTEE ON ENERGY RESEARCH AND PRODUCTION

HEARINGS ON NUCLEAR POWER PLANT SAFETY

ADDITIONAL QUESTIONS FOR MR. SAUL LEVINE

1. List the lessons learned from the accident at Three Mile Island and provide recommendations or suggestions for rectifying the problems in question.

2. In your testimony you said that many of the details of the accident at Three Mile Island had to be filled in. Did this imply that the "Interim Sequence of Events" provided by Mr. Denton on May 23 is incomplete, or that it had not been brought to your attention prior to your testimony? Is this sequence accurate?

3. Please expand upon your comment:

   "From the viewpoint of nuclear power plant safety design, two principal technical elements are involved in TMI. The most important is that the plant was configured so that the pressure relief valve on the primary coolant system opened very often due to events such as a failure of normal feedwater flow to the reactor."

   Does this imply an abnormally high frequency of failure of the feedwater supply or a poor design in the plant or equipment?

4. You indicated on page 5 of your testimony that there are significant differences in relief valve behavior between the reactor studies in the Reactor Safety Study and Three Mile Island. It would seem useful to apply Reactor Safety Study techniques more broadly to see if other such differences can be found. Are you doing anything about this?

5. On page 6 of your testimony you indicate that the bulletins issued by the NRC should significantly reduce the likelihood of future TMI events. Are you satisfied that these are the only actions needed?

6. On page 7 of your testimony you note that you are going to reexamine the basis for the Reactor Safety Study-predicted failure probability for the auxiliary feedwater system. Do you think that the RSS prediction was seriously in error?

7. On page 7 of your testimony you indicate that the techniques developed in the Reactor Safety Study can be used effectively to help determine improvements that may be needed in the safety of nuclear power plants. Could you elaborate on this matter?

8. In regard to the consequences of the TMI accident, list the work that you said would be in addition to that specified in the FY 1980 budget request.

9. In your testimony you mention the preparation of a supplemental budget request. When will you have this finished and when will you be able to provide a list of the items involved and an indication of their relative importance?

10. Is there a need for a "Swat Team" composed of people from industry, the utilities, NRC, etc.?

11. Should nuclear power plant operators be utility company employees? Are there any reasonable alternatives.

12. Are there any advantages in standardizing the design of nuclear power plants?

13. Do you think that Computer Modeling could be of importance in improving operator training, or in developing response strategies for multi-failure, multi-error incidents?

14. Is there an adequate data base upon which to develop a good computer model?

15. In your view, is there anything in either the Rasmussen Report, or in the Lewis review, which if implemented would have decreased either the probability of the Three Mile Island accident, or which would have reduced its severity?

16. List your suggested modifications to the LOFT experiments, and provide details of the transient analysis that you mentioned.

17. List the future reactor research safety programs that you mentioned.

UNITED STATES
NUCLEAR REGULATORY COMMISSION
WASHINGTON, D. C. 20555

JUL 02 1979

The Honorable Mike McCormack, Chairman
Subcommittee on Energy Research and Production
Committee on Science and Technology
United States House of Representatives
Washington, DC 20515

Dear Mr. Chairman:

Enclosed are the responses to your additional questions resulting from Saul Levine's May 22, 1979 testimony before your Subcommittee. We hope the answers provided will add the additional information desired to assist the Subcommittee in its important deliberations.

We will be most happy to provide you or your Subcommittee members with any requested additional information or clarification as needed.

Sincerely,

Lee V. Gossick
Executive Director for Operations

Enclosure:
As stated

Response to Additional Questions Relating to the May 22, 1979 Testimony of Mr. Saul Levine to the Subcommittee on Energy and Production Hearing on Nuclear Power Plant Safety

1.Q List the lessons learned from the accident at Three Mile Island and provide recommendations or suggestions for rectifying the problems in questions.

A. As part of NRC's investigation of the Three Mile Island (TMI) accident a task force titled "Lessons Learned" has been set up to identify areas where improvements are needed in plant design, operation, and accident response. The task force is being directed by the Office of Nuclear Reactor Regulation and the main aim of the task force is to make recommendations for changes in the licensing process to reduce the likelihood of severe accidents at commercial nuclear power plants in the future. The task force consists of approximately 22 full-time staff members. The staff members are from various offices of the agency, including the Office of Nuclear Regulatory Research (RES).

The task force expects to make specific recommendations on the NRC's accident response role and on management, administrative, and technical capabilities necessary to effectively deal with hazardous conditions that may arise at licensed facilities. The task force will review the current practices for accident response, make comparison with TMI events and provide recommendations.

The task force will probably last for several months with interim reports given to the Commission as information is developed.

2.Q In your testimony you said that many of the details of the accident at Three Mile Island had to be filled in. Did this imply that the "Interim Sequence of Events" provided by Mr. Denton on May 23 is incomplete, or that it had not been brought to your attention prior to your testimony? Is this sequence accurate?

A. I have no doubt that the "Interim Sequence of Events" provided by Mr. Denton is accurate. My statement was meant to cover the possibility that, as additional study of the TMI-2 accident is made, some more significant information might come forth.

3.Q. Please expand upon your comment:

> "From the viewpoint of nuclear power plant safety design, two principal technical elements are involved in TMI. The most important is that the plant was configured so that the pressure relief valve on the primary coolant system opened very often due to events such as a failure of normal feedwater flow to the reactor."

Does this imply an abnormally high frequency of failure of the feedwater supply or a poor design in the plant or equipment?

A. This does not imply a high frequency of failure of the feedwater supply. All reactors are designed to accommodate transients involving loss of feedwater, that occur several times a year; however, it is clear in the B&W case that the relief valve lifts each time there is a loss of main feedwater and this is an undesirable situation that has been corrected by the bulletins issued by the NRC since the TMI accident.

4.Q You indicated on page 5 of your testimony that there are significant differences in relief valve behavior between the reactor studies in the Reactor Safety Study and Three Mile Island. It would seem useful to apply Reactor Safety Study techniques more broadly to see if other such differences can be found. Are you doing anything about this?

A. Reactor Safety Study techniques are already being applied in a broader way and it is our hope that such quantitative risk assessment applications will increase in the future. For instance, in the Methods Application Program we are studying four plant designs which are different from those in the Reactor Safety Study to further extend our engineering insights into reactor safety. These analyses include a wide range of plant safety systems, components, and operator activities. We are also currently applying the techniques of the Reactor Safety Study to assist the Office of Nuclear Reactor Regulation in a review of the auxiliary feedwater systems of about 30 nuclear plants. In addition, we are presently developing an integrated reliability evaluations program in which event trees will be constructed for all plants having significantly different accident sequences. System logic models will be constructed for the critical systems identified from the event tree analysis. This effort will be performed on a priority basis and will provide an integral view of the input design differences on plant safety.

5.Q. On page 6 of your testimony you indicate that the bulletins issued by the NRC should significantly reduce the likelihood of future TMI events. Are you satisfied that these are the only actions needed?

A. I am satisfied that these were the most immediate actions needed. I believe that additional actions will have to be taken in the future as we digest more of the lessons of the TMI-2 accident. However, these are not as urgent and require some careful analysis before they can be effectively implemented. Some of the general directions that have to be explored are indicated in the research topics included in my testimony.

6.Q. On page 7 of your testimony you note that you are going to reexamine the basis for the Reactor Safety Study-predicted failure probability for the auxiliary feedwater system. Do you think that the RSS prediction was seriously in error?

A. We believe that the RSS prediction is not seriously in error. This judgment is based on the fact that each auxiliary feedwater system is tested about 12 times per year and is called on to operate about three or more times per year. Given at least 3000 trials of these systems over the years, we are aware of only one instance (TMI-2) where the system was completely disabled. We will of course have to do further evaluations as further data become available.

7.Q. On page 7 of your testimony you indicate that the techniques developed in the Reactor Safety Study can be used effectively to help determine improvements that may be needed in the safety of nuclear power plants. Could you elaborate on this matter?

A. Quantitative risk assessment techniques can be used, for instance, to determine the relative safety significance of various design features in a plant and among plants. For example, we are currently applying risk assessment methodology to 30 nuclear plants with various designs to look at a wide range of safety systems, components, and operator activities.

Also, a number of priority areas for investigation have been identified using risk perspectives in the Improved Safety Program (which was transmitted to Congress in early 1978 as NRC document NUREG-0438).

8.Q. In regard to the consequences of the TMI accident, list the work that you said would be in addition to that specified in the FY 1980 budget request.

9.Q. In your testimony you mention the preparation of a supplemental budget request. When will you have this finished and when will you be able to provide a list of the items involved and an indication of their relative importance?

17.Q. List the future reactor research safety programs that you mentioned.

A. We would like to undertake a significant amount of important research in FY 1980. We are preparing a FY80 supplemental budget request for FY80 to cover this area. I have attached a copy of the requested budget supplement for FY 1980. All of the items listed in the requested budget supplement are considered to be of high priority. This budget supplement request is still preliminary in that it has not been approved by the Commission.

Projects for future reactor safety research currently include continuation of much of the work included in the FY 1980 budget and the FY 1980 supplemental budget request. Areas where new programs are likely to be suggested are in improved reactor safety, improved risk assessment methodology, and some areas of exploratory research as suggested by the Advisory Committee on Reactor Safeguards (ACRS).

10.Q. Is there a need for a "Swat Team" composed of people from industry, the utilities, NRC, etc.?

A. Yes. Regional teams of nuclear experts specially trained to assist during serious accidents at nuclear facilities could be a valuable resource during an emergency. The group would provide expert advice to plant management during an emergency; however, they should not be chartered to take over operation of the reactor; the utility's power plant operators should continue to operate the reactor.

11.Q. Should nuclear power plant operators be utility company employees? Are there any reasonable alternatives?

A. Yes, plant operators should be utility company employees. We do not believe that reasonable alternatives exist for using operators who are not employees of the utility company. Under current methods of assigning safety responsibility, the utilities are held accountable for safe operation of the nuclear power plants and the use of other than utility operators would remove this accountability.

12.Q. Are there any advantages in standardizing the design of nuclear power plants?

A. Many of the initial difficulties faced in coping with the TMI incident would have been reduced had TMI been one of a family of standard plants under a standardization policy implemented with a high degree of discipline; standardization provides a policy and framework for the staff and the industry to know, understand, and model the response of plant systems, and thus, to quickly and effectively analyze differing situations. This suggestion is based upon the assumption that the number of nuclear power plants will continue to expand, perhaps substantially, beyond those presently committed. With the number of reactor vendors, architectual engineers, and site specific needs there will be some difference in design between individual plants. However, the potential benefits such as facilitating licensing review and faster response during emergency or accident situations would indicate a need for standardizing plant designs.

13.Q. Do you think that Computer Modeling could be of importance in improving operator training, or in developing response strategies for multi-failure, multi-error incidents?

A. Yes. We are planning to investigate the feasibility of programming a control room simulator to simulate numerous transients (WASH-1400 event trees might serve as a guide) with which control room operators could be trained. Also we are looking at the technical feasibility of using real-time computerized systems to monitor plant status, display information, diagnose upset conditions and prescribe remedial action as aids to nuclear reactor operators.

14.Q. Is there an adequate data base upon which to develop a good computer model?

A. A sufficient data base does exist to begin development of a computer model for system response following transient and small LOCA events. However, additional system data will be required to upgrade these models and to test and validate the model application to reactor systems. We expect that the planned tests in Semiscale and LOFT, which we will undertake soon as a response to lessons we have learned because of the TMI accident, will provide much of these needed additional data.

15.Q. In your view, is there anything in either the Rasmussen Report, or in the Lewis review, which if implemented would have decreased either the probability of the Three Mile Island accident, or which would have reduced its severity?

A. The Rasmussen Report noted that the small break LOCA had a potential for a significant contribution to public risk. Also, human factors could determine the direction of events and have the potential to turn a less severe accident into a more severe accident. It is possible that if more attention had been paid to these areas the accident at TMI-2 would not have been as severe and that the agency would have been better prepared to respond. The Lewis Report contains recommendations about the use of risk assessment techniques to improve reactor regulation. However, the period between publication of the Lewis Report and the TMI accident was too short (only a few months) that very little in the way of specific implementation has had a chance to occur.

16.Q. List your suggested modifications to the LOFT experiments, and provide details of the transient analysis that you mentioned.

A. The LOFT test program which was established prior to TMI was to have continued the large break tests in FY 1980 (simulating loss-of-offsite power and at different power levels). However, our current plan is to delay the large break tests and run three small break tests and one natural circulation test during FY 1980. These tests are more relevant to the TMI-2 accident analysis and therefore have been given higher priority.

Prior to the TMI-2 accident the emphasis of the code development program was on developing a multi-dimensional thermal-hydraulic code for large break LOCA's in PWR plants. For small break LOCAs and certain types of non-LOCA transients that are of much longer duration, we need a much faster running code. Fortunately geometrical details are less important in these analyses and can be simplified allowing the codes to run faster. To this end Los Alamos Scientific Laboratory is in the process of producing a code (TRAC-PF1), on an accelerated basis and should be available by the end of this calendar year.

DISCUSSION OF RESEARCH NEEDS TO ADDRESS ISSUES RAISED BY THE TMI ACCIDENT

The major areas of research needs arising from the TMI accident are discussed below.

It is clear that small LOCA, transient events and enhanced operator capability are areas that need additional research resources. In particular, better computer codes are needed (1) to enhance our understanding of small LOCAs and transients, (2) to allow multitudinous studies to be made of these types of events and the many variations that can occur in them, and (3) to predict with greater precision than now available the behavior of plants in response to such events. The development and checking of these codes will require experiments in such facilities as LOFT and Semiscale (for PWRs) and TLTA (for BWRs) to provide insights to develop the physical models in the codes and to check their range of applicability. The availability of these same codes will allow studies to be made toward enhancing operator capability. Studies will be made of simulator requirements to enhance their capabilities for training plant operators, analyses of the instrumentation needed by operators to understand and react properly to the full spectrum of potential reactor accidents, and studies of the control room display and diagnostic equipment needed to assist the plant operators in effecting proper responses and insuring that limiting conditions of operation are met. In addition, these same codes will allow us to analyze the startup transient tests already performed on operating reactors and will give NRC the understanding and the basis for specifying additional startup tests that may be needed on operating plants. At the same time, risk assessment tasks to construct event trees are needed to define accident sequences covering severe core damage which the codes must calculate and to guide the research tasks needed to assess the potential impacts of human error on the course of these types of accidents. In parallel with these studies it is necessary to investigate potential means for improving plant design features such as improved decay heat removal and ECC systems, vented containment concepts, etc.

Also of great interest is the need to better understand the response of plants to accidents of the kind that occurred at TMI. It is clear that we need a better understanding of primary coolant chemistry after severe fuel damage, hydrogen evolution and behavior in the primary coolant system and in the containment, behavior of important plant components under long term, severe accident environments, equipment qualification and testing requirements and structural analysis of important plant components and safety features under accident conditions.

Finally, it is important to preserve the data on the amount and dispersion of fission products throughout the plant and to examine the TMI fuel to assess the type and extent of damage to the core. In parallel, it will be necessary to examine safety-related equipment in the plant to assess the extent of damage and to establish criteria for safety requalification of the plant.

IDENTIFIED RESEARCH NEEDS (TMI)

	Category	FY 80 Supplement ($ Million)
A.	Better Understanding of Transient and Small LOCA Accidents	$ 13.4
B.	Enhanced Operator Capability	3.8
C.	Plant Response Under Accident Conditions	5.1
D.	Post Mortem Examination and Plant Recovery	2.7
E.	Improved Risk Assessment	3.1
F.	Improved Reactor Safety	1.7
		$ 29.8

Each of these research areas is further subdivided into research tasks in the tables below:

A. Better Understanding of Transient and Small LOCA Accidents

Modifications and Checking of Existing Codes to Improve their Capability to Handle Transient, Natural Circulation and Small LOCA Accidents in PWRs and BWRs	$ 3.1
Upgrade Semiscale to Study PWR Transients	3.0
Upgrade TLTA to Study BWR Transients and Small LOCA	2.2
Modify LOFT to Accelerate Small LOCA Tests	1.0
Separate Effects and Thermal-Hydraulic Tests	1.3
Coolability of Severely Damaged Cores; Release and Transport of Fission Products	2.4
Establish Data Bank for Each Operating Reactor for NRC Calculations	0.4
	$13.4

B. Enhanced Operator Capability	($Million)
Develop Improved Control Room Display and Diagnostic Systems and Improved Requirements for Operator Training Simulators	$ 1.8
Develop Instrumentation Needs and Improved Status Monitoring of ESF's	1.0
Define Data Transmission Requirements and Review Accident Response Procedures	1.0
	$ 3.8

C. Plant Response Under Accident Conditions	
Improved Understanding of Coolant Chemistry after Fuel Failure; Better Sampling Methods	0.5
Hydrogen Behavior in Coolant and Containment; Effect of Hydrogen Explosions	1.2
Response of Plant Equipment and Structures to Accident Conditions	2.1
Potential Design Improvements for Maintaining Containment Integrity under Fuel Melt Conditions	0.5
Benchmark Testing of Structural and Piping System Analysis Codes	0.8
	$ 5.1

D. Post Mortem Examination and Plant Recovery	
Examine Samples of TMI Damaged Fuel	1.0
Measure Fission Product Chemistry and Plateout Data	0.6
Post Mortem of TMI Safety Related Equipment and Establish Requalification Criteria	1.1
	$ 2.7

E. Improved Risk Assessment	
Develop Event Trees of Accidents Leading to Severe Core Damage and Assess Site Specific Accident Consequences	1.4
Analysis of Human Error Rates and Impacts of Human Errors on Risk	1.2
Operational Failure Data Analysis	0.5
	$ 3.1

F. Improved Reactor Safety	($ Million)
Improved Containment Concepts	$ 0.5
Improved Safety Systems for Coping with Accidents Involving Severely Damaged Fuel	1.0
Improved Value/Impact Methodology	0.2
	$ 1.7

DON FUQUA, FLA., CHAIRMAN
ROBERT A. ROE, N.J.
MIKE McCORMACK, WASH.
GEORGE E. BROWN, JR., CALIF.
JAMES H. SCHEUER, N.Y.
RICHARD L. OTTINGER, N.Y.
TOM HARKIN, IOWA
JIM LLOYD, CALIF.
JEROME A. AMBRO, N.Y.
MARILYN LLOYD BOUQUARD, TENN.
JAMES J. BLANCHARD, MICH.
DOUG WALGREN, PA.
RONNIE G. FLIPPO, ALA.
DAN GLICKMAN, KANS.
ALBERT GORE, JR., TENN.
WES WATKINS, OKLA.
ROBERT A. YOUNG, MO.
RICHARD C. WHITE, TEX.
HAROLD L. VOLKMER, MO.
DONALD J. PEASE, OHIO
HOWARD WOLPE, MICH.
NICHOLAS MAVROULES, MASS.
BILL NELSON, FLA.
BERYL ANTHONY, JR., ARK.
STANLEY N. LUNDINE, N.Y.
ALLEN E. ERTEL, PA.
KENT HANCE, TEX.
JOHN W. WYDLER, N.Y.
LARRY WINN, JR., KANS.
BARRY M. GOLDWATER, JR., CALIF.
HAMILTON FISH, JR., N.Y.
MANUEL LUJAN, JR., N. MEX.
HAROLD C. HOLLENBECK, N.J.
ROBERT K. DORNAN, CALIF.
ROBERT S. WALKER, PA.
EDWIN B. FORSYTHE, N.J.
KEN KRAMER, COLO.
WILLIAM CARNEY, N.Y.
ROBERT W. DAVIS, MICH.
TOBY ROTH, WIS.
DONALD LAWRENCE RITTER, PA.

COMMITTEE ON SCIENCE AND TECHNOLOGY
U.S. HOUSE OF REPRESENTATIVES
SUITE 2321 RAYBURN HOUSE OFFICE BUILDING
WASHINGTON, D.C. 20515

HAROLD A. GOULD
EXECUTIVE DIRECTOR
PHILIP B. YEAGER
REGINA A. DAVIS
JAMES E. WILSON
WILLIAM O. WELLS, JR.
RALPH N. READ
JERRY STAUB
JAMES W. SPENSLEY
STEPHEN LANES
IAN W. MARCEAU
MINORITY STAFF DIRECTOR:
PAUL A. VANDER MYDE

JUN 07 1979

Dr. Harold W. Lewis
Professor of Physics
University of California
Santa Barbara, CA 93106

Dear Dr. Lewis:

Thank you for providing testimony at our subcommittee hearings on Nuclear Power Plant Safety on May 22, 1979. During these hearings you indicated that you would provide the subcommittee with responses to a number of questions, together with other additional information. Enclosed is a list of questions: we would appreciate receiving your response by June 25, 1979.

Thank you for your cooperation.

Sincerely,

MIKE McCORMACK
Chairman, Subcommittee on
Energy Research and Production

Enclosure

SUBCOMMITTEE ON ENERGY RESEARCH AND PRODUCTION

HEARINGS ON NUCLEAR POWER PLANT SAFETY

ADDITIONAL QUESTIONS FOR DR. HAROLD LEWIS

1. Would there be any advantages in standardizing the design of nuclear power plants?

2. Is there any need for a "Swat Team" composed of people from industry, the utilities, the NRC, etc.?

3. Should there be a standard design for control rooms and for the layout of control room panels and instruments?

4. List the research and development programs which you would recommend to improve nuclear power plant safety.

5. Expand upon your comment that the NRC has made little use of the Rasmussen Report.

6. List the "substantial problems" that you mentioned you have found in the Rasmussen Report.

7. Expand on your comment that constructive human intervention was required to modify the course of the accidents at Three Mile Island and Browns Ferry.

8. Expand on your comment that a flexible response is a key to limiting the course and the consequences of accidents. What computer aid or assistance would you suggest be provided to nuclear power plant operators?

9. Identify the lessons which have been taught as a consequence of the Three Mile Island accident. Provide recommendations or suggestions for overcoming these problems.

10. Do you think it is time for an updated version of WASH-1400 modified so as to incorporate: your criticism of the risk assessment methodology; and a consideration of transients, small LOCA and human errors as important contributions to overall risk?

11. In your opinion, is there anything in either the Rasmussen Report, or in the Lewis review, which if implemented would have decreased either the probability of the Three Mile Island accident or which would have reduced its severity?

UNIVERSITY OF CALIFORNIA, SANTA BARBARA

BERKELEY • DAVIS • IRVINE • LOS ANGELES • RIVERSIDE • SAN DIEGO • SAN FRANCISCO

SANTA BARBARA • SANTA CRUZ

DEPARTMENT OF PHYSICS

SANTA BARBARA, CALIFORNIA 93106

27 June 1979

The Honorable Mike McCormack
Chairman, Subcommittee on
Energy Research & Production
Committee on Science & Technology
U.S. House of Representatives
Suite 2321 Rayburn House Office Bldg.
Washington, D.C. 20515

Dear Congressman McCormack,

Thank you for your letter asking me to reply to a number of questions intended to amplify my testimony before your Subcommittee, on May 22nd. I'm sorry this is a bit later than you had requested, but I was out of town and slow to receive your letter. I hope this is sufficiently timely.

1. **(Would there be any advantages in standardizing the design of nuclear power plants?):**

Ultimately there will be advantages in such standardization, since it will reduce the number of specific plant designs which require detailed analysis. For example, it is apparently so that there are now some 24 separate feedwater systems among pressurized water reactors, since the design of the feedwater system is left to the architect-engineer. However, in my view, it is premature to move toward standardization while there are still so many generic safety issues outstanding.

2. **(Is there any need for a "Swat Team" composed of people from industry, the utilities, the NRC, etc.?):**

I do not see a need for such a "Swat Team", provided we work very hard in upgrading the instrumentation and training available to reactor operators, to enable them to cope on-site with a greater variety of accident situations. On the other hand, lists of experts on specific issues, and dedicated communications make sense, just to reduce the lead time necessary to obtain useful advice. As has been said before, the characteristic of a reactor accident is that it takes a long time to develop, so that consultation is feasible.

3. **(Should there be a standard design for control rooms and for the layout of control room panels and instruments?):**

I don't believe that one could now construct a good standard design for control rooms. There is a great deal of variety, and a greatly enhanced level of study of what is called the "man-machine interface" is necessary, before one can decide which layout of control room panels and instruments is optimal for the widest variety of accidents in which the operator can intervene constructively.

4. **(List the research and development programs which you would recommend to improve nuclear power plant safety.):**

I am reluctant to answer this question, since I am sitting on the Advisory Committee on Reactor Safeguards, which will be reviewing the NRC safety research program. On the other hand, the report of the American Physical Society had very detailed recommendations for the reactor safety research program, and I still support those recommendations. I am particularly pleased that Bob Budnitz, who served on that panel, as well as on the Risk Assessment Review Group, is now deeply involved in the formulation of the NRC safety research program.

5. **(Expand upon your comment that the NRC has made little use of the Rasmussen Report.):**

My principal concern is, as I stated in my testimony, that the NRC response to our criticism of the Rasmussen Report included the assertion that it has made little use of it in the past. I believe that the Rasmussen Report, flawed though it was, still represented a major and serious effort to delineate the principal reactor accident sequences, and that the wisdom thereby provided ought to have been seized upon to orient the research and regulatory programs of NRC. In particular, as an example, the Rasmussen Report should have directed more attention at small LOCAs and transients, and who is to know whether one might thereby have prevented the accident at Three Mile Island. I personally believe that the NRC overemphasis on large LOCAs has been in part a response to ill-considered intervenor pressure, which has outlived its usefulness.

6. **(List the "subsstantial problems" that you mentioned you have found in the Rasmussen Report.):**

For this you should have our Risk Assessment Review Group Report, but the list included there is, succinctly: statistical errors, an inadequate data base, inadequate ability to quantify common cause failures, an inadequate treatment of human response issues, etc.

7. **(Expand on your comment that constructive human intervention was required to modify the course of the accidents at Three Mile Island and Browns Ferry.):**

At Browns Ferry a control rod drive pump was used to cool the reactor in other than the normal mode, and substantial repairs were accomplished on failed relief valves. These are simple examples of many places in which the plant superintendant, Jim Green, directed a major human effort to save the plant. One has only to read the chronology to recognize the importance of this.

At Three Mile Island, after the initial errors and the consequent core damage, intervention consisted of managing the temperature and pressure of the plant, managing the size of the hydrogen bubble, removing the hydrogen bubble, and generally managing the cooling of the plant. In this case, of course, one can imagine even more constructive human intervention earlier in the course of the accident.

8. **(Expand on your comment that a flexible response is a key to limiting the course and the consequences of accidents. What computer aid or assistance would yu suggest be provided to nuclear power plant operators?):**

This is a comment which arises from a conviction that any accident sequence that threatens a plant will contain surprises, and that the number of possible accident sequences is sufficiently large that it is not likely that they can all be catalogued. Consequently there is a great premium on ability to understand what is happening inside a reactor during the course of an accident, and on appropriate response. As far as computer aid or assistance, though I have not thought this through, an ideal would be an ability to program possible actions on a simulator to provide some guidance on the consequences of those actions. We should, however, be careful not to overstate the ability of a simulator to simulate a reactor under accident conditions, in an area in which the codes which go into the simulator have not been verified experimentally.

9. **(Identify the lessons which have been taught as a consequence of the Three Mile Island accident. Provide recommendations or suggestions for overcoming these problems.):**

My lessons are, in brief,

1) There will be accidents.
2) These accidents will contain surprises.
3) Flexible and informed human response is essential to arresting the course of an accident.
4) Redundant and prolific instrumentation designed to describe the state of a reactor in an upset mode is important, so that the human response can be informed.
5) Proper training, education, and selection of reactor operators is essential.

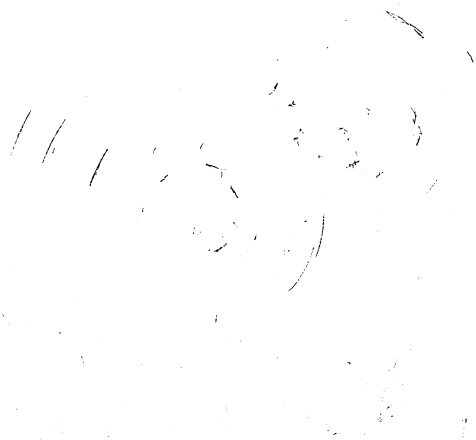

10. **(Do you think it is time for an updated version of WASH-1400 modified so as to incorporate: your criticism of the risk assessment methodology; and a consideration of transients, small LOCA and human errors as important contributions to overall risk?):**

As I stated in my testimony, I do not think that an updated version of WASH-1400 would be sufficiently better than the current one to justify the effort. I do believe that the risk assessment methodology, as we said in our report, should be far more widely used on subsystems for which it can be used well, and that it should also be used as a principal means of resolving generic safety issues. That more consideration needs to be given to transients, small LOCA, and human performance is now well known to everyone, and the problem is to get cracking on it.

11. **(In your opinion, is there anything in either the Rasmussen Report, or in the Lewis review, which if implemented would have decreased either the probability of the Three Mile Island accident or which would have reduced its severity?):**

Again, as I stated in my testimony, I find that both the Rasmussen Report and the Risk Assessment Review Group report emphasized the importance of understanding the issues of transients, small LOCA, and human performance. Attention to those recommendations, which have also been made by others in the past, would very likely have greatly reduced the probability of the Three Mile Island accident. In addition, since problems of this sort have now been found to have occurred in other reactors at earlier times, a more attentive response to operating experience as a means of learning about the weaknesses of reactors, again as has been recommended for a long time, might have averted the Three Mile Island accident.

I hope you find these comments useful.

Sincerely,

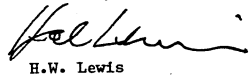

H.W. Lewis

HWL/jb

APPENDIX II

ADDITIONAL MATERIAL FOR THE RECORD

RON PAUL
22ND DISTRICT, TEXAS

WASHINGTON OFFICE:
ROOM 1234
LONGWORTH HOUSE OFFICE BUILDING
WASHINGTON, D.C. 20515
(202) 225-5951

Congress of the United States
House of Representatives
Washington, D.C. 20515

DISTRICT OFFICES:
1110 NASA ROAD 1
SUITE 406
HOUSTON, TEXAS 77058
(713) 333-2566

HOUSTON CONGRESSIONAL HOT LINE
(713) 237-1550

101 OYSTER CREEK DRIVE
LAKE JACKSON, TEXAS 77566
(713) 297-3961
(713) 393-1895

LAKE JACKSON CONGRESSIONAL HOT LINE
(713) 297-0202

Dr. Ruggan
Dr. Beckmann

May 4, 1979

Honorable Jack Wydler
Committee on Science and Technology
Suite 2321 Rayburn
Washington, D. C.

Dear Jack:

In response to your letter of May 1 soliciting comments on nuclear waste, I am enclosing two articles by Dr. Peter Beckmann that I placed in the Record on April 24 and 25.

I would appreciate it very much if they were entered into the record of your Subcommittee's hearings.

Sincerely,

Ron

Ron Paul, M.C.

RP/jr

Enclosures

From Bob [illegible]
[illegible]
[illegible]

These are sobering conclusions. There is no need for more studies, and the children cannot afford to wait. There can be no surer test of a Member of Congress' commitment to children and families than that indicated by his or her support for H.R. 3434.●

CASE AGAINST NUCLEAR ENERGY IS A BUM RAP

HON. RON PAUL

OF TEXAS

IN THE HOUSE OF REPRESENTATIVES

Wednesday, April 25, 1979

● Mr. PAUL. Mr. Speaker, Dr. Petr Beckmann, professor of electrical engineering at the University of Colorado and expert on nuclear energy, also publishes and edits an extremely useful newsletter called "Access to Energy." This publication is distinguished by its hard-headed, nonhysterical approach to nuclear energy—an approach that is particularly valuable in these days.

The May issue contains material that I would very much like to bring to my colleagues attention, as a necessary antidote to the ravings of the antinuclear zealots.

No form of mass energy production is completely safe, as was demonstrated when the Liberian oil tanker exploded in Nederland, Tex., recently.

But, as Dr. Beckmann demonstrates so eloquently, the case against nuclear energy is a bum rap.

THE GRAND DISASTER: WHY NO CASUALTIES?

(By Petr Beckmann)

Everybody knows that the greatest "catastrophe" in hte history of nuclear power resultetd in zero dead, zero injured and zero diseased; but not everybody can see through the four big frauds promulgated by the media and by the politicians catering to them.

"It was a close shave; a meltdown was only narrowly averted." This is two frauds in one. First, there never was a time when a meltdown was close; it was held off by several lines of defense and would not have set in even if further malfunctions had occurred. Second, a meltdown would not have been the end of the world, either: The purpose of the containment building is to contain radioactivity *after* a meltdown has taken place, and even if it, too, fails, there would still have to be a very unusual weather situation before there could be large-scale loss of life.

The third fraud is "Scientists told us that an accident like this is virtually impossible, but now it has happened." What scientists have been saying, and continue to say, is that there is an extremely low probability of a nuclear accident *with massive loss of life*. This writer, for example, does not have to rewrite a solitary line of his book *The Health Hazards of Not Going Nuclear*, and does not hesitate to recommend it to those who wish to understand why the zero death toll at Harrisburg was not merely "lucky." * Politicians who now pretend to have been duped into thinking that a nuclear accident, especially one with not loss of life, was impossible, not only falsely claim that they were told engineers are infallible and mechanical failures unheard of, but in effect they now pompously proclaim that they were dumb enough to believe it.

The fourth fraud is that "The much touted safeguards failed on Three Mile Island." They did not. Nuclear safety is not based on this or that gadget, but on two principles by which to contain any unforeseen events that might occur. One is thte defense in depth, a multi-layered system of defense belt around the only danger point, the reactor core.

The two major bulwarks of this defense are the Emergency Core Cooling System and the containment building. Both were the main targets of the anti-nuclear obstructionists, and both performed superbly. Every honest scientist and every informed citizen will be reassured by a defense system that stood up to a freakish series of five independent, horrible failures and human errors under the most aggravating conditions.

The second principle of nuclear safety is the slowness of a nuclear accident. Had more defense lines been penetrated (or had they, as before, been disabled by error), more countermeasures, up to and including evacuation, could have been taken. A meltdown, which is not the last line of defense, takes many hours and gives plenty of advance warning. Alas, it was this very advantage of slow evolution (6 days) that enabled the cannibals to fan the hysteria to fever pitch.

Worse than the frauds, perhaps, was a stupendous omission. 845 MW is a lot of power, and when much energy is pent up, it is always dangerous. But nobody compared the dangers. A dam break can kill 100,000 people in a matter of minutes. Where is the first, second, and seventeenth dam when the first fails? What kind of emergency cooling do the LNG tankers docking 3 miles from downtown Boston have? Where are the evacuation plans when a gasoline refinery blows up?

No one died at Harrisburg, and no one ever came close to it.

But generating electric power by fossil fuels kills some 20,000 Americans a year by air pollution, transportation and industrial diseases. There will now be a few more dead, injured and diseased added to that toll because TMI Unit 2 no longer delivers the power that is safer. And already the media, and the politicos who cater to them, are calling for that toll to increase by slowing, or even stopping, nuclear power.

Predictably, those who opposed the safest form of power on the grounds of safety oppose it even more now that its safety has been vindicated in battle.

HOW IT HAPPENED

What happened at Three Mile Island (3MI) is this:

At 4 a.m., on March 28, when the 845 MW reactor was running at 98% capacity, there was a malfunction in the feedwater flow on the turbine side. Both auxiliary pumps tried to take over automatically, but (in violation of NRC regulations) the valves had been left shut so no water could get through. The turbines tripped (shut out of service) automatically and normally. On the reactor side, the loss of the heat sink in the steam generator resulted in an increase in temperature and pressure, which generated a reactor trip signal; the reactor "scram" (instant interruption of the chain reaction by full insertion of the control rods) occurred automatically and normally.

Increased pressure should be handled by the pressurizer's steam cushion and relief valve (just as in a household pressure cooker). It was, and the relief valve worked normally, but it stuck and failed to close—a second failure, and one that caused much further trouble.

The steam escaping from the relief valve goes into the relief tank where it is quenched in cold water. But when the relief valve stayed open, the steam was followed by water and forced out the rupture disks (that's what they are for: As with freeze plugs in an automobile engine, it is better to lose the plugs than the machine). A path was now provided for the water to leak out from the pressure vessel through the pressurizer and the still open relief valve to the floor of the containment building, and the water began flowing out. As soon as the pressure and the water level dropped, the big moment in 22 years of nuclear power history had come: The first occasion for the Emergency Core Cooling System to be activated in a real emergency.

It would never work, the Naders had been yelling; the steam wouldn't let the water in, the tests were on too small a scale, they were nothing but staged theatrics and computerized eyewash.

Now the big moment had come. Within seconds, years of anti-nuclear propaganda were shattered as the ECCS came in, automatically, instantly, reliably. It can take bigger holes than an open relief valve, injecting water much faster than it leaked out through the stuck valve in the pressurizer, so that water and pressure were restored almost immediately and everything would have been OK—if the operator had realized that the water was leaking out through the relief valve (which could have been closed, or failing that, there are provisions for putting the ECCS into a closed circuit pumping the water through the sump back into the reactor).

Instead, he did what amounted to lighting a third match in a gasoline refinery: He switched off the ECCS. (Don't blame him with hindsight—yet. He may have been fooled by correct, but misleading pressurizer readings.) The water again leaked out through the open valve, but this time the ECCS had been disabled, part of the core was exposed, hydrogen was produced in a reaction between the zirconium cladding and water at high temperatures, and by the time the open relief valve was detected and closed, and water restored to the vessel, the now famous hydrogen bubble had coagulated. It allowed only slow circulation of the cooling water and slow reduction of its temperature (turning the pumps on at full power would have risked damaging them severely, and there were many safer options open).

In the meantime, a fourth match in our analogous gasoline refinery had been lighted: The radioactive water on the containment floor was pumped automatically into the take-up tanks in the auxiliary building and—fifth match—overflowed them. Whether this pump came on by a lucky coincidence (5.5 min after the ECCS had been activated), or by a design error that fails to test the water for radioactivity (for example) is not known to this writer. But once again, there is defense in depth even here: The filters in the drains let out virtually no radioactive material other than Xenon, an inert gas that reacts neither with the filters nor with the human body and does not give it an internal dose (see below).

The final mishap occurred on Friday, 3/30, when the water was pumped back into the containment building (where it should have stayed harmlessly all the time); some water was spilled, giving rise to a puff of radioactivity. It resulted in a miniscule dose in Pennsylvania, but gigantic headlines in New York.

SAFETY PRINCIPLE VINDICATED

There are no second and third chances in any other large-scale energy facility; but on 3MI, after a chain of five independent, hair-raising failures, there were plenty of backups before a meltdown was even close. But what if everything else had failed and a meltdown had actually taken place?

It would have taken hours for the pressure vessel alone to melt, during which time the neighboring population could have been evacuated, just in case the containment building would have cracked and let out radioactive gases.

But in all probability it wouldn't have. What makes us so confident?

An item that the Pulitzer-prize hunting scaremongers had missed: At 2 p.m. on 3/28

the instruments in the containment building recorded a pressure spike, which was almost certainly a hydrogen explosion. While the would-be reporters were speculating about an explosion of the hydrogen bubble inside the reactor vessel (where there was little or no free oxygen, and no possibility of a spark to set it off), an explosion had already taken place in the containment. Why would the building that withstood the explosion (it must also withstand a 300 mph hurricane and the impact of a jetliner at landing speed) fail to contain gases at much lower pressures?

But the defense in depth, which kept a meltdown remote at all times, is only half of the principle of nuclear safety. The other half is the slowness with which the danger approaches, giving the defenders ample time for countermeasures. Within hours, the industry had flown in teams of experts; one such team engaged in almost Naderite "what-if" fantasies. What if the pump fails? We use the other primary loop (our figure shows only one of two). What if that fails, too? We have the ECCS. What if both loops fail because the power fails? We have a diesel stand-by generator. What if that fails, too? Let's fly in another. And they did.

There is not just the defense in depth; there is also the time to bolster it in the places where it might grow weak. On both counts, nuclear safety has withstood a test in the field, under the most aggravating conditions, with plenty of resiliance to spare.

Yes, there will be a lot of recriminations and rethinking in the industry. We will wait for the full explanation before jumping to conclusions about human failures, design errors or even darker possibilities. On the other hand, the incident revealed at least three highly reassuring items:

The ECCS has now been tested under "battle conditions" and came through with flying colors.

The containment building, which is meant to contain radioactive gases *after* a meltdown, withstood a hydrogen explosion.

Perhaps most surprising of all, the core, which had been assumed to melt after exposure of a few minutes, was actually exposed (partially, top only) for three separate periods: 1½ hours, ½ hour, and 6 (six!) hours, respectively. No doubt the exposed parts of the fuel rods will be found badly damaged, bent and burst; but they did not melt (almost no uranium was found in the water coming out of the core). The Rasmussen Report was wrong here, after all, at least for this type of zirconium core: It was far too pessimistic. . .

RADIOACTIVITY

The sum total of radioactivity released in the Harrisburg Grand Disaster was 80 millirems (offical testimony by HEW Secretary). That is as much *additional* radiation as a certain kind of person would receive by moving from Pennsylvania into the editorial offices of this newsletter (elevation 7,200 ft in the ore-rich Rockies) for less than a year. What kind of person? The kind that stood naked near the plant 24 hours a day for the entire episode.

But that is not all, for rems alone do not tell the whole story. Practically all of this was due to Xenon, which is inhaled and breathed out again without reacting with the body. How about Iodine, which gets into the food chain and lodges in the thyroid gland, possibly causing thyroid cancer? The level of Iodine activity was 1/20 (one twentieth!) the level resulting in Pennsylvania from the fallout from the Chinese bomb tests in 1976 (when all those protest demonstrations were held against Red China by the Fondas, Naders and Ellsbergs, remember?).

This time the Iodine level in milk was only 22 picocuries/litre (pC/1); the EPA and NRC start kicking when it reaches 1200 pC/1. Patients given radioiodine in diagnostic tests leave the hospital with up to 30 millicuries (30 billion pC) in their bodies and radiate a lot more than the milk "affected" by the Pennsylvania non-disaster. Not long ago, a lady who was given such a test went on vacation with her husband immediately afterwards. He was given a dosimeter by researchers of the U. of Mich. to see how much radiation he would absorb from his wife (most of it in the first two days). After they returned, his dosimeter was read: 2.5 rems! That is 12 times more from his wife than the "victims" in Pennsylvania received from the reactor in all of the "nuclear nightmare."

And we are still talking about Iodine given to *healthy* patients. Patients with cancer of the thyroid are given up to .2 curies, or 50 billion times more than is found in a quart of "contaminated" milk.

But the most important comparison is the milk before and after the Grand Disaster. There was no significant change.

In fact, the milk imbibed by William Penn was only slightly less radioactive than it is now.

WHY WAS THE HYDROGEN BUBBLE NOT FORESEEN?

It was. Engineers knew about the reaction that produces hydrogen and immediately diagnosed the trouble. (Remember that they had no direct access to the core, and had to make inferences from instrument readings and computer simulations.) What they had not foreseen was a sequence of events (including the ECCS being switched off manually) in which the core would remain exposed for more than a few seconds or minutes.

In a way, the incident is similar to that at Browns Ferry: Everybody knew that the insulation could catch fire, but nobody foresaw a wise-guy who would use the open flame of a candle on it. After the Browns Ferry fire, hundreds of miles of cable were pulled out in plants under construction and replaced by caoles with fire-resistant insulation. When the dust settles from the 3MI incident, there will be many changes, and one of them will doubtlessly be a provision to bleed off any gases that might lodge in the cooling loop.

But the next incident, and by the iron laws of probability there will eventually be one, will be of yet another kind, except that it will again be unforeseen. Nobody, least of all a federal buresucracy (which is now being clamored for) can foresee everything. But the trick of nuclear safety is not to foresee *everything*, it is to contain *anything*.

The principle of guarding against the unforeseen, whatever it may be, by a multilayered defense, and by providing the time to bolster that defense where necessary, paid off at Browns Ferry, paid off at Harrisburg, and will pay off again in the future.

The impossibility of applying this principle to other power sources, with their diluted dangers, is what will continue to make them less safe.●

GOVERNMENT PUBLICATIONS FOR SALE

Additional copies of Government publications are offered for sale to the public by the Superintendent of Documents, Government Printing Office, Washington, D.C. 20402, at cost thereof as determined by the Public Printer plus 50 percent: *Provided*, That a discount of not to exceed 25 percent may be allowed to authorized bookdealers and quantity purchasers, but such printing shall not interfere with the prompt execution of work for the Government. The Superintendent of Documents shall prescribe the terms and conditions under which he may authorize the resale of Government publications by bookdealers, and he may designate any Government officer his agent for the sale of Government publications under such regulations as shall be agreed upon by the Superintendent of Documents and the head of the respective department or establishment of the Government (U.S. Code, title 44, sec. 1708).

LAWS RELATIVE TO THE PRINTING OF DOCUMENTS

Either House may order the printing of a document not already provided for by law, but only when the same shall be accompanied by an estimate from the Public Printer as to the probable cost thereof. Any executive department, bureau, board or independent office of the Government submitting reports or documents in response to inquiries from Congress shall submit therewith an estimate of the probable cost of printing the usual number. Nothing in this section relating to estimate shall apply to reports or documents not exceeding 50 pages (U.S Code, title 44, sec. 716).

Resolution for printing extra copies, when presented to either House, shall be referred immediately to the Committee on House Administration of the House of Representatives or the Committee on Rules and Administration of the Senate, who in making their report, shall give the probable cost of the proposed printing upon the estimate of the Public Printer, and no extra copies shall be printed before such committee has reported (U.S. Code, title 44, sec. 703).

DR. PETR BECKMANN ON NUCLEAR POWER

HON. RON PAUL

OF TEXAS

IN THE HOUSE OF REPRESENTATIVES

Tuesday, April 24, 1979

● Mr. PAUL. Mr. Speaker, energy expert Dr. Petr Beckmann was interviewed last week by John Rees in the Review of the News.

Dr. Beckmann, professor at the University of Colorado, was born and educated in Prague. He worked at a research institute of the Czechoslovak Academy of Sciences until 1963, when he had the chance to lecture at the University of Colorado. He never returned to Eastern Europe, which has been a great gain for the United States.

Dr. Beckmann has written more than 60 scientific papers, as well as eight books, and he publishes and edits Access to Energy, a monthly newsletter on nuclear power.

In the post-Three Mile Island hysteria, Dr. Beckmann's voice has remained calm and scientific. His interview contains much information of value, and I would like to call it to my colleagues' attention:

QUESTIONS AND ANSWERS

Q. Professor Beckmann, we have all heard arguments from the opponents of nuclear energy that nuclear power plants are ripe targets for sabotage and for terrorists who would seize nuclear waste or even plutonium and threaten to disperse it, say by throwing it out of an airplane. Does this make sense?

A. Not really. It would be much easier, and cause vastly great damage, for terrorists to throw hand-grenades, or set off high explosives, at a dam above a city than for them to break into a nuclear power plant. They would have to assemble a team of schizophrenics who on the one hand would be geniuses or experts in a large number of varied disciplines, and yet on the other hand be too stupid to realize that there are far easier methods of inflicting grievous injury on the population at large.

Plutonium is of course toxic, and if you breathe plutonium dust you can get lung cancer. But you will not get that cancer for 15 to 40 years, if at all. Only a very inept terrorist would use a weapon that takes years and years to kill. Better to use toxic substances like arsenic and other chemical and biological toxins that are difficult to trace. Radioactive material can be detected in ludicrously minute quantities, after all, and so defensive measures can be taken against it. For terrorists, a pocket knife would be a more effective weapon than radioactive materials.

You can bet that any attack against a nuclear power plant is for the purpose of trying to discredit nuclear power and for that reason alone.

Q. Could a nuclear reactor at a power plant explode so that one morning we might see a mushroom cloud looming over the debris of a devastated power plant?

A. The uranium used in the powerplant reactors is not sufficiently enriched for an explosion to occur. The danger at the Three Mile Island reactor in Pennsylvania was from hydrogen gas that formed because of heat after the water level fell and exposed part of the reactor. And actually it now turns out that hydrogen did explode and the containment building withstood its force without problem.

Q. Professor Beckmann, the mass media treatment of the accident at Three Mile Island has been quite sensational. What did we learn from what happened there?

A. The accident at the Three Mile Island plant is unquestionably the most serious in the 22-year history of nuclear power. But the most significant aspect of that accident was not merely that it produced no deaths, no injured, no casualties, no illness, no hospitalization; but that the zero casualty figure was not due to "good luck." The accident produced a gigantic test of the principle of nuclear safety; namely the concept of the "defense in depth," in which there are many layers of complementary and supplementary safety measures. Another very important point is that it demonstrated the slowness with which a nuclear-plant accident heppens, allowing plenty of time to select countermeasures.

Q. What was the malfunction; that is, how did the accident occur?

A. All the details have not yet been published, and the Nuclear Regulatory Commission and other agencies are still compiling their reports. But, from the available information, what happened at Three Mile Island was a chain of four gigantic failures, two mechanical and two human. A pump circulating coolant water to the core of the reactor failed. Immediately and automatically the Emergency Core Cooling System (E.C.C.S.) went into action as it was supposed to do. Also immediately the control rods dropped down to shut-off the reactor, just as they were designed to do. However the human errors now came into play. Valves in the E.C.C.S. system had been manually shut by a workman, and so water did not immediately go into the core. On at least two occasions human beings working in the plant turned off the E.C.C.S., allowing the core of the reactor to be left uncovered by coolant water.

Nonetheless, the built-in safeguards withstood this improbable chain of events, and there were still at least two more levels of safety before a meltdown was likely. Furthermore, even if a meltdown had occurred, most probably there would have been no casualties because the containment building would have held the radioactive gases. It proved how strong it was by withstanding a hydrogen explosion, and it could easily have withstood steam explosions and radioactive gases.

That Emergency Core Cooling System, which has been a particular target of the anti-nuclear critics who claimed it could never work, performed well under the most severe conditions.

The incident at Three Mile Island has provided a severe field test which has shown that the E.C.C.S. will perform under the most adverse and unforeseen conditions; that the containment building can contain radioactive gases and even a hydrogen explosion; and, that the filters in the auxiliary building to trap radioactive iodine was pumped are so effective that only infinitesimally small quantities of inert radioactive gases and iodine escaped into the atmosphere.

Q. Where did the hydrogen gas come from?

A. Among the events that happened automatically was that the reactor was turned off. However, you cannot prevent the nuclear fission products in the fuel rods from continuing to be hot. When part of the core became uncovered as the level of cooling water dropped, the temperature rose and the heat broke down some of the water into its components, hydrogen and oxygen. The reactor core was damaged presumably by the overheating, which may have caused melting or warping of the fuel rods that are surrounded by a light-weight metal cladding.

Q. What about that so-called "leaking" of radioactivity outside the plant?

A. Radioactive gas escaped from the reactor area into the containment building which surrounds the reactor. And the containment building, which is enormously strong and built to withstand even a jet plane crashing into it, held the radioactivity just as it should. That is what it was built to do.

But then it appears that another human error was made by pumping water from the containment building to the auxiliary building, which held the radioactivity better than it was expected to do. It has elaborate filters which removed everything radioactive except for the noble gases such as xenon, argon, and krypton. These are not retained by the body.

Q. Then you view the Three Mile Island incident as proving the safety of nuclear power?

A. Yes indeed. What we have seen in this case is a sequence of events that took place over many hours, and by that I mean not only the malfunctions but also the human errors. And yet there was plenty of time to make tests, discuss and decide what the best options were and are, and to take countermeasures. By comparision, how much time and what sort of countermeasures are available when an oil tanker explodes?

Any energy facility, by its very nature, contains a lot of pent-up energy. If that energy is released suddenly, it can be destructive; and, as long as man is fallible, it can happen. In a ship or tank or liquefied natural gas, a dam, an oil tanker or refinery—the release of energy is sudden and disastrous. There is only one exception and that is the case of a nuclear plant. There, part of the energy gets loose and does what it is not supposed to do, such as a meltdown, it melts down into the earth for many hours and ends up in a big glass marble of fused earth. Meanwhile you have many possible countermeasures, up to and including evacuating people from the area.

Q. How dangerous is a "meltdown" of the sort first feared at Three Mile Island?

A. Let's first look at the process. Should there be a loss-of-coolant accident in a light-water reactor—that is, a reactor that uses ordinary water, under pressure or not, to cool the core—the temperature of the fuel rods may rise to the point where they melt their light metal cladding. The heat comes from the accumulation of radioactive fission products in the fuel rods.

In the worst possible case, this material would form a red-hot goo on the floor of the thick steel pressure vessel that would slowly melt through the steel and through the floor of the containment building into the earth to a depth of some 25 feet or so where it would dissipate its heat. Very probably the cooled goo now encased in a glass marble of fused earth could be removed, even salvaged, without major complications. Unless it ran into an underground stream and managed to vent steam into a blowhole outside, all radioactive gases would still be contained inside the containment building of concrete and steel above the melt site.

A widely respected nuclear scientist, Dr. R. P. Hammond, who has had considerable experience in cleaning up after nuclear accidents in Canada, has said he couldn't think of a better place for meltdown material to be than far underground, shielded by overlying rock and earth, enclosed in a pocket of fused earth.

Q. How do the exposures to radioactivity at the Three Mile Island plant compare to our normal exposure to background radiation?

A. A radiological health expert from the Nuclear Regulatory Commission, Frank Congel, has stated that the cumulative dose of radioactivity for a person living in the closest house to the plant who had remained out of doors for five consecutive days continuously, 24 hours-a-day starting at the time of the accident, could have received as

much as 85 millirems of radioactivity. By comparison, a complete body X-ray in a hospital gives you this much radiation.

As I pointed out in my book, *The Health Hazards Of NOT Going Nuclear*, the natural background radiation varies depending on where you live. In New York City, you naturally get 93 millirems a year; in Dallas only 53; in Carlisle, Pennsylvania, not many miles from Three Mile Island, you get 87.

And the average exposure for a Colorado resident is about 150 millirems; but in Boulder, where I live, we naturally and quite safely get 220 millirems. This is because of the natural radioactivity in the granite rocks, the altitude which gives us more cosmic rays, and similar factors. So the people living closest to the Pennsylvania plant got about the same radiation as if they had been visiting with me for four and a half months here in beautiful Colorado.

Q. And so the earth, sky, and buildings around us are constantly radiating us in small but measurable amounts?

A. More than that, whenever you take a coast-to-coast airplane trip you receive five extra millirems of radiation from outer space during that trip. Your color television set gives you one extra millirem. Even human beings are measurably radioactive because the food we eat gives us about 25 millirems of radiation. Such radiation is hardly frightening.

I have to laugh because every time the anti-nuclear fanatics hold a meeting they receive more radiation from each other than they would living near a nuclear power plant. A power plant may emit only 10 millirems as measured on its property line; and, actually, if the Nuclear Regulatory Commission measures even five millirems they start making complaints to the utility. It was Dr. Edward Teller who said, "In sleeping with a woman, one gets just slightly less radioactivity than from a nuclear reactor; but to sleep with two women is very, very dangerous." Perhaps this bit of information will make the anti-nuclear fanatics more moral. Though I doubt even they will contend that our former Vice President died of radiation!

Q. Some radioactive iodine also was released from the Three Mile plant, and that does get into the food and into the thyroid gland, doesn't it?

A. Yes, and great care is taken so that no substantial amounts are released. Dr. Harold Denton, the head of the N.R.C. safety division, has announced that in the milk samples from 22 dairy farms in an 18-mile radius around the Three Mile Island plant, the level of radioactive iodine (iodine-131) was between 10 and 20 picocuries per liter. The N.R.C. does not move to block the consumption of milk as unhealthy until it contains 12,000 picocuries of radioactive iodine per liter.

According to the mass media, the governor said he would require the milk to be monitored until no iodine-131 was present. Well, a level of 2 to 5 picocuries is normal in milk. And when the fallout from the Red Chinese atom bomb came down in the rain over the Northeastern states, the milk registered iodine-131 levels of 150 to 300 picocuries per liter; yet there was no public outcry over that. Besides, milk is normally radioactive, having about 1,400 picocuries of radioactivity (not just iodine) per liter. Whiskey averages 1,200 picocuries per liter, and salad oil a whopping 4,900. A mere 20 picocuries is hardly a cause for concern.

Q. At what level does radiation make you ill?

A. The media have been screaming about the worker at the plant who went in to get a 'sample of the coolant water and received 3 rems—3,000 millirems—of radiation. They did not tell the public that even under our stringent safety regulations a worker in a nuclear facility is permitted to receive up to 5 rems in any year with a maximum of 3 rems in any quarter. At 600 rems, you will probably die of radiation sickness.

Q. What are the mechanics of a nuclear power plant and how does it differ from a coal-fired electric-power plant?

A. Except in a hydroelectric plant, in large-scale power plants electricity is generated by steam which turns a turbine. The only difference is in what you use to produce the heat that makes the steam that drives the turbine.

In a nuclear-fueled electrical generating plant, the heat comes from a slow chain reaction in fuel rods that release heat that raises the temperature of the water in the reactor core. Then, that steam or pressurized hot water goes into a heat exchanger where it heats a second separate circuit to produce the steam that drives the turbines.

There is a third type of reactor not being used very much in this country though it is superior to both the boiling water and the pressurized water reactor, and that is the high-temperature gas reactor. It is more efficient because it can reach higher temperatures. It is also safer, because should the gas used as a coolant leak out, air would leak in to replace it and so a meltdown is virtually impossible.

Q. Dr. Beckmann, why should this country want to build nuclear-powered electrical generating plants, rather than use coal or oil-powered plants?

A. There are several reasons. First, it is safer by large factors. Secondly, nuclear energy for these plants can be produced domestically. This means a great saving in not having to buy foreign oil; it is beneficial to the balance of payments; and, it obviously means that the United States does not have to be dependent upon the whims of unstable dictators. Thirdly, nuclear power is much more economical than coal or oil; and this is so despite the large costs added on by the lawyers for the environmentalists, who fight tooth and nail in court against the nuclear plants, and the government regulations which cost millions and millions of additional dollars. With all this it is still cheaper than coal, let alone oil.

There is a further reason why we should go nuclear. If we use breeder reactors and reprocess the wastes in spent fuel instead of merely burning up our 100 years' supply of uranium, we get plutonium. And plutonium can serve as a fuel for several thousand years. Beyond that we could go on and breed thorium, but that is further in the future than anyone now alive can see. Certainly our coal, let alone gas and oil, can last no more than a few centuries. But nuclear power can last for thousands of years.

Q. Nuclear power plants have been opposed from their inception by critics who have equated them with nuclear bombs. What is the nuclear power safety record?

A. First, let me correct you. These environmentalists have not always opposed nuclear power. Back in the early 1960s, thinking nuclear power impractical, they were very opposed to coal mining and recommended nuclear power as being more healthful because it is more clean. Of course that was not the real motivation of many of these fanatics. They were just using nuclear power to harass coal. They always call for the development of that form of energy which they think is not available. Solar power is their idol now. What they really want is a no-growth society in which they are the ones with the power, upward mobility is stopped, and we do what we are told by their beloved regulators.

As for the atom-bomb comparison, let's get this over with once and for all. The fuel in a nuclear power plant can not explode. This is because of the laws of physics. In natural uranium ore, 99.3 percent of the uranium is uranium-238 which is not fissionable. A mere 0.7 percent of the ore is uranium-235 which is fissionable. To make a uranium bomb, you must purify or enrich the material so that more than 90 percent of it is uranium-235. Even then an explosive chain reaction cannot occur unless a certain amount is forced together against the energy of the chain reaction.

But the fuel in a power-plant reactor is merely 3.5 percent uranium-235. Thus it is impossible by the laws of physics for it to undergo an explosive nuclear chain reaction.

Q. Your point is that nuclear power is safe?

A. Nothing involving energy can be 100 percent safe. The question is whether using nuclear power to generate electricity is safer than any other method. If that is the question, the answer is yes.

Let's look at coal. Report 1554-D, released by the Energy Research and Development Administration early in 1977, has been kept very quiet and virtually suppressed by the federal government. It said that the coal-burning power plants east of the Mississippi were annually responsible for 18,000 premature deaths from lung diseases and cancer.

This does not even begin to get into the additional areas of more than 200 fatal accidents each year in coal mines. The average was 246 deaths for the period 1965 to 1969, but there were only eight deaths of uranium miners in accidents in that period. Of course, we need to mine far less uranium than coal. The really significant measurement is in the number of deaths in relation to the amount of energy produced.

Q. And what is that.?

A. For every billion megawatts of electricity consumed, we lose 189 lives in coal mining for coal-powered plants, but only two in uranium mining for nuclear plants. Per million megawatts of electric energy consumed, injuries cost 1,545 disability days for coal miners and 157 disability days for uranium miners. And look at the industrial diseases coal causes. Each year there are 4,000 deaths among coal miners attributed to Black Lung disease. And each year the federal government—which means the American taxpayer—is paying nearly a billion dollars in health benefits to disabled Black Lung victims.

What about the environmental impact? This country's annual consumption of electricity is close to 2 billion megawatts. Compare the volume of coal that must be mined to produce that (a massive chunk 200 feet by 200 feet by 100 miles) with the volume of uranium ore needed to produce the same energy (200 feet by 200 feet by 100 feet). The point is that going nuclear could reduce disruption of the earth by a factor of 5,000. Also coal ash is highly toxic, and enormous areas must be given over to its storage. The emissions from burning coal—sulfur dioxide, nitrous oxide, known carcinogens like benzopyrene—are known to be harmful.

I don't want to just knock coal. But each year we delay in building a nuclear plant to replace 1,000 megawatts of coal-fired power, we condemn between 20 and 100 Americans to death.

Q. You noted earlier that oil and natural-gas storage are also dangerous.

A. Certainly, because so much has to be stored. An oil-fired generating plant of 1,000 megawatts capacity burns 40,000 barrels of oil a day. It is customary for them to keep on hand a six weeks' supply of 2 million barrels. Oil storage facilities sometimes explode and burn. In 1973, 1976, and again very recently, oil storage tanks in the greater New York area have burned. And there

are more and more cities with vulnerable L.N.G. tanks. In a temperature inversion situation, thousands could die by asphyxiation and exacerbated lung conditions and asthma from such a fire.

In 1973, the maximum permissible dose of radiation at the property line of a nuclear plant was reduced from 170 millirems per year to 10 millirems. Statistically, doing this reduced the annual 300,000 cancer cases in this country by three. The cost was $800 million for each of the three statistically saved lives. Parenthetically, you know neither the U.S. Capitol nor Grand Central Station could be licensed as a nuclear reactor because just the rock—marble, sandstone, and granite—of which those buildings are made emit more than 10 millirems of radioactivity.

Q. About a year ago some American nuclear engineers were given a tour of several Soviet nuclear reactors and power plants. Are you familiar with what they found?

A. Yes, I read their report. The Soviet Union is trying feverishly to go nuclear, but is having the failures a centrally planned society always has. Significantly, the Soviets do not worry much about safety and it is only recently that they began to construct containment buildings around their reactors. The power-plant reactor they exported to Finland is called "Eastinghouse" by nuclear engineers in the West because all of its safety equipment such as the Emergency Core Cooling System, containment, and so forth was supplied by Western companies.

The U.S.S.R. is aware that nuclear energy is the energy of the future. But the Comrades have a forked-tongue. Soviet neutrons are called "progressive," but capitalist neutrons are "dangerous." Klaus Fuchs, the notorious atom spy who now heads the East German atomic-energy program, has said the reason we need so many safety programs is because of the poor quality of the training and education of our people. They thus claim that in a Communist society safety is unnecessary.

Q. And they also are behind some of the anti-nuclear hysteria here and in Europe, and have tried to link nuclear power to disarmament issues.

A. Yes, on the one hand they mock the Western middle-class as being decadent and afraid of technology and spread the rumor that opposition to nuclear power in the West is artificially inspired by the oil companies who want to attain greater profits. But, on the other hand, they are themselves quite evidently fanning the anti-nuclear hysteria in the West.

Q. Then do you see the question of nuclear power now as a political issue?

A. It has been taken outside the area of technical expertise. If logic and science were the only factors, we could be much further advanced on the road to nuclear power.

Long before Ralph Nader's crusades to attack American business, and certainly before his Critical Mass rallies began to resemble the Nuremburg *Parteitags* of the Third Reich, the so-called environmentalist movement developed heavily political overtones.

These environmentalists tended to be against economic growth, for population control, against helping South Vietnam, for making deals with the Communists, as well as for greater permissiveness in legal and ethical issues; they tended to be college educated and affluent, heavily involved in the information industries, the media and the universities. But they should never be called liberals because they are diametrically opposed to the true liberalism of Adam Smith, Mill, or von Hayek. While paying lip service to civil liberties, they strongly favor government interference and coercive legislation. In fact, the urge to use coercion against all who do not agree with them, and the arrogant premise that people do not know what is good for them, are the two chief characteristics shared by this otherwise heterogeneous elite.

Q. Then the claims of extreme risk in nuclear power of the sort made by best-sellers like *We Almost Lost Detroit* are gross distortions?

A. John Fuller's rile book is based, like most of the anti-nuclear propaganda, on providing only carefully selected information. It's like saying "Governor X has been sober for three days now," or that "Senator Y's wife has not been seen at any motels with young men this week." The one may be a teetotaler and the other completely faithful, but they have no defense against the slander.

The Fermi I reactor attacked in that book could not have hurt a fly in Detroit. The reactor had not been in operation long enough for sufficient fission products to accumulate to cause a full meltdown. Two rods in the reactor melted. The problem was fixed and the reactor went back into service. The reviewers who praised that book displayed their technological ignorance and unmitigated stupidity.

The other favorite so-called "nuclear accident" that radicals herp on was the 1975 fire at the Browns Ferry power plant in Alabama. It had nothing to do with radioactivity. The fire was started by an inept electrician who decided to use a candle to check for an air leak and managed to set the electrical insulation on fire. There was no danger to the reactor, or from the reactor, because of the many layers of safety measures engineered into the plant.

Q. Once more, what is the lesson of Three Mile Island?

A. This has been a gigantic field test, a test in battle under the most adverse conditions, of the very heart of the concept of nuclear safety—the multiple layer "defenses in depth." And the second important point is the demonstration of the slowness with which nuclear reactor accidents develop. We have proven that there is plenty of time to work out whatever additional measures are needed to assure safety.●

THE HOLOCAUST—NEVER AGAIN

HON. THOMAS B. EVANS, JR.

OF DELAWARE

IN THE HOUSE OF REPRESENTATIVES

Tuesday, April 24, 1979

● Mr. EVANS of Delaware. Mr. Speaker, the Jewish community in our country and around the world carries in their collective memory the terrible tragedy of the Holocaust Jews suffered at the hands of the Nazis.

During World War II over 6 million Jews were annihilated during one of the darkest hours in the history of the Jewish people and the whole world.

As a country dedicated to the sanctity of each individual's life and liberty, we pause today and remember the suffering of the Jews to confirm our dedication to the ideals of freedom.

The Holocaust was one of the most horrendous exercises of tyrannical power ever on a captive minority. It graphically illustrates the potential destructiveness of unchecked bigotry and ignorance; two things we must always strive to abolish from our society.

The concern of the Nation as a whole over the outrages of the Holocaust was reflected in the unanimous support of Congress in setting aside this day of remembrance. I join all Americans in pledging support to the Jewish people as we remember those innocent victims. We do this to insure the Holocaust is never forgotten, and to make sure it never happens again.●

NUCLEAR SAFETY AND THE MEDIA

HON. ROBERT E. BADHAM

OF CALIFORNIA

IN THE HOUSE OF REPRESENTATIVES

Tuesday, April 24, 1979

● Mr. BADHAM. Mr. Speaker, out of the hysteria of Three Mile Island in Pennsylvania a bright ray of hope for the future of nuclear energy has emerged.

Currently, nuclear plants produce between 12 and 13 percent of the country's electrical needs with 72 operating plants. There are another 90 plants under construction and 34 additional in various design stages. This means that within the foreseeable future as much as 35 to 40 percent of our energy needs could be produced by nuclear power.

But what about the accident at Three Mile Island? At Three Mile Island everything went wrong. The emergency systems worked properly, but were ineptly or inadvertently shut off by human error. However, in spite of the foul-ups nuclear power's safety record remains intact—not one life has been lost due to radiation caused by an accident at a nuclear powerplant since the first one came on line 23 years ago.

A Los Angeles Times article of April 23 cuts through the haze of misinformation surrounding Three Mile Island and brings to light some interesting facts about the accident and its after effects. I commend the article to my colleagues attention and insert it at this point in the RECORD.

MEDIA BLAMED FOR FUELED NUCLEAR FEARS—UCI SAFETY OFFICER SAYS PUBLIC MISINFORMED ON REACTOR MISHAP

IRVINE.—The public has an unreasoning fear of nuclear accidents—fear that was aggravated by uninformed reporting by the news media during the incident at Three Mile Island power station.

So said William Wadman, UC Irvine campus radiation safety officer, in a talk this week titled "Radiation Plus Media Equals Science Fiction."

Wadman said the recent accident in Pennsylvania was a case in point.

The nature of the accident—radioactive contamination kept investigators away—made factual information difficult to obtain he said. Newsmen filled in with impressions, opinions and speculations from persons of dubious expertise, Wadman claimed.

He said the public had to be confused, because he as a professional could not sort out the truth.

He does know that information be received through technical channels was not available to newsmen until one to three days later, he said.

Wadman said the Nuclear Regulatory Commission, the electric company and Pennsylvania state officials did "a rotten public relations job" and treated the news media poorly.

Reporters, for their part, did not want to wait for information, he said.

Wadman told of watching a television

University of California
LOS ALAMOS SCIENTIFIC LABORATORY
Post Office Box 1663 Los Alamos, New Mexico 87545 505/667-5061

In reply refer to: Q-6
Mail stop: 559

June 8, 1979

JUN 15 1979

The Honorable Mike McCormack, Chairman
Subcommittee on Energy
Research and Production
Committee on Science and Technology
U.S. House of Representatives
Suite 2321 Rayburn House Office
Building
Washington, DC 20515

Dear Mr. McCormack:

This letter is in response to your May 18, 1979 letter (received June 5) requesting my written testimony for the record of the May 22-24 hearings on Nuclear Reactor Safety. You indicated that the Subcommittee is particularly interested in suggestions for technology development to enhance the safety of nuclear power plants including the subject of radiolytic hydrogen in a PWR reactor vessel following a loss of pressure accident.

My experience in this area includes analysis of containment hydrogen concentrations resulting from radiolytic hydrogen produced in water on the containment floor after a loss-of-coolant accident and, in addition, analysis of hydrogen concentrations in the primary system of the Three Mile Island plant in the weeks following the accident. Others in the area of nuclear power plant reactor safety research at Los Alamos Scientific Laboratory have direct experience in reactor materials and fission product chemistry and in modeling and analysis of primary coolant system flow for accident conditions.

This testimony considers hydrogen in both the PWR reactor vessel (primary coolant system) and in the containment, as produced in the Three Mile Island incident. The main line of defense always has been and should continue to be prevention of such accidents. However, it seems prudent to improve our understanding of hydrogen production and removal rates, among other phenomena of interest, at the temperatures and pressures of the accident conditions. As an additional measure, it also seems prudent to consider possible engineering approaches to remove any hydrogen produced during such an incident.

For example, a potential engineering approach is to design safety systems to remove hydrogen in either the primary coolant system or the containment. In the primary coolant system, hydrogen might be removed by using scavengers that react with hydrogen and/or by adding an operator-controlled valve at the top of the vessel to permit any hydrogen bubble to be vented into the containment. In the containment system, the hydrogen might be removed by

TWX 910-988-1773 Telex 66-0496 Fascimile 505/667-6937 (automatic) 505/667-7176 (operator assist)
An affirmative action/equal opportunity employer

using a rapid hydrogen recombiner system to eliminate the problem of hydrogen burning in the containment. Another or perhaps supplemental option would involve venting the containment atmosphere through filters to remove fission products. Any such systems added to either the primary coolant system or the containment would have to be investigated for impact on other safety systems and tested for total effectiveness.

As a basis for such considerations, additional data are needed to improve the determination of the hydrogen production and removal rates in the primary coolant system at the temperatures and pressures of the accident conditions. Areas where research could provide improved data include: (1) hydrogen production by radiolysis and steam reactions with zirconium (probably the major source of hydrogen in Three Mile Island), (2) hydrogen removal by reactions with zirconium, (3) hydrogen recombination in a radiation field with the oxygen produced by radiolysis, (4) hydrogen dissolving in the water, and (5) hydrogen removal by scavengers. Since the radiolytic hydrogen production and recombination rates depend partly on the quantity of solid fission products in solution, better data are needed to determine how much of the fission products go into solution as a function of the amount of zirconium reacted. The results of investigations in these research areas could be combined into a primary system coolant chemistry computer code to calculate hydrogen production and removal for various accident scenarios.

Additional research is also needed to improve the determinations of the hydrogen distribution in the containment resulting from a concentrated source (coming out of the vessel) plus a distributed source from radiolysis in primary system water released to the containment building floor. A computer code could be developed that treats these two sources plus hydrogen removal by recombiners and/or containment venting.

To summarize, the main line of defense should continue to be prevention of accidents. However, it seems prudent to investigate possible engineering approaches to removing hydrogen if it is produced, and, as a basis for this, research is needed to improve our understanding of hydrogen production and removal rates at the temperatures and pressures of the accident conditions.

Please contact me if you have questions concerning this testimony.

Sincerely yours,

Gordon J. E. Willcutt, Jr.

Gordon J. E. Willcutt, Jr., Ph.D.
Thermal Reactor Safety Group, Q-6
Energy Division

THE AEROSPACE CORPORATION

Post Office Box 92957, Los Angeles, California 90009, Telephone: (213) 648-5000

June 22, 1979

Dr. John V. Dugan, Jr.
Subcommittee on Energy Research and Production
Committee on Science and Technology
Room B374, Rayburn House Office Bldg.
U.S. House of Representatives
Washington, DC 20515

Dear Dr. Dugan:

In accordance with our telephone conversation, I am sending you a revised copy of my written testimony on "Human Engineering Influences on the Performance of Nuclear Power Plant Operators" which was prepared for the record of the May 22-24 hearings on Nuclear Reactor Safety. As a result of the tight schedule for submission of the testimony, a few changes have been required in the material which I sent to you on June 8, 1979. The enclosed copy clarifies a few important sections of the material without changing the substance of the conclusions.

Again, I thank you for the opportunity of expressing my views on this subject.

Sincerely yours,

Fred C. Finlayson, Manager
Nuclear and Geothermal Systems
Energy Systems

Enclosure

HUMAN ENGINEERING INFLUENCES ON THE PERFORMANCE OF NUCLEAR POWER PLANT OPERATORS

F. C. Finlayson
The Aerospace Corporation
El Segundo, California, USA

INTRODUCTION

Under off-normal operational conditions, operators in nuclear power plants are inundated with an enormous amount of information which must be collected, processed, and evaluated in a logical and timely fashion in order to make appropriate control decisions. The operator's ability to make decisions under stress is primarily influenced by three general factors: (a) control room and control system design; (b) operator physical and emotional characteristics; and (c) formalized plant operational procedures. Human engineering is the science which attempts to harmonize the design and/or capabilities of all three of these areas in order to optimize the operator's performance in the control center.

In this testimony, the author's views are presented with respect to the effects of human engineering on operator performance in the control room. The conclusions have their genesis in the results of a study which was conducted by The Aerospace Corporation for the NRC in late 1976 (Ref. 1). Primary attention has been given to the effects of control room and control system design on the operator. Brief observations on the influences of operator characteristics and operating procedures on performance in the control room have also been presented. In the earlier Aerospace Corporation study, special emphasis was placed on the evaluation of the control room-operator relationships under severe emergency conditions in the power plant. The observations presented below have also been restricted largely to material related to emergency conditions in the control room. In spite of this limitation, it is recognized that human engineering of control systems is at least as important for normal and near-normal plant operation as it is for emergency conditions. The restriction of the comments to emergency conditions has only been used to keep the scope of the conclusions within manageable levels.

BACKGROUND

Human errors, and especially operator errors, in nuclear power plants have become an increasingly common source of concern. Operator errors in nuclear power plants have been increasing at a rate which is nearly proportional to the growth rate of the power plants themselves (Ref. 2). On several occasions, of which the Three Mile Island accident is the most recent and most severe, operator errors have contributed to accidents which have had nerve wracking consequences. More specific examples of these experiences will be discussed subsequently. It should be noted, however, that there are

two principal methods which have been used to evaluate the potential impacts of operator errors on accidents in nuclear power plants: (a) probabilistic analyses using fault tree/event tree formalisms; and (b) actuarial statistical evaluations based upon results of abnormal incidents in nuclear plants which have been documented in NRC Licensee Event Reports (LER).

The most prominent example of the application of fault tree/event tree probabilistic methods is the Rasmussen, "Reactor Safety Study" (WASH-1400 -- Ref. 3). One of the major limitations of fault tree/event tree methodology is associated with defining a sufficiently complete set of branching failure paths for the systems being considered. It is generally conceded that it is practically impossible to define an absolutely complete set of event tree/fault tree failure paths. LER statistics, on the other hand, may be equally incomplete -- depending upon the quantity of data available and its applicability with respect to the designs of current and future nuclear plants. Under current circumstances, both event tree/fault tree methods and LER analyses are needed to determine the probability of operator errors in off-normal plant incidents. The relative areas of usefulness of these two approaches in defining the potential impacts of human errors will be discussed in more detail subsequently.

Two of the more significant physical factors contributing to operator errors in a nuclear facility are: (a) the prodigious size of the control board; together with, (b) the complexity of the power plant and its safety related systems. Control boards have reached, and exceeded, lengths of 100 feet. Some boards have over 5000 control and display devices, which provide information on about 10,000 functions. In these instances, over 1000 of the functions displayed on the control panels can be classified as presenting information which is critical to plant and public safety for normal and emergency operations (Ref. 1). Simply keeping track of the operational status of all critical equipment components in the plant has become an increasingly difficult problem, especially if a substantial amount of maintenance is being performed in the plant. If the operator is not fully aware of the functional status of all significant equipment components at all times, serious problems can develop in the event of off-normal plant conditions -- as the Three Mile Island accident dramatically demonstrated.

Control room designers have concluded that under emergency conditions the size of the control board and the consequent "volume of raw information exceeds the saturation point of the operator" (Ref. 4). The flood of information delivered under such circumstances places heavy mental and emotional demands on the operator for integration and comprehension of the input data. The operator's problems are exacerbated because the unprocessed data from the plant is presented without prioritization in short periods of time. This excess of information results in conditions of extreme mental stress for the operator. At these times, neither data integration nor memory exercises are easily performed. Under such stressful conditions, mental requirements of these types contribute to operator errors. Yet the concensus of opinion among operators is that more, rather than less, data are needed on the critical elements of plant status. Operators do not wish to reduce the

quantity of information displayed on their control boards. Thus, the elements of a dilemma become apparent: a recognized need exists to reduce operator information overloads which must be balanced against a perceived need for more data on the status of critical plant systems.

SOURCES OF OPERATOR ERRORS -- ACTS OF "OMISSION" vs. "COMMISSION"

An assessment has been made of the potential sources for operator errors in the control room. Engineering analyses (Ref. 4) and empirical data in the form of Licensee Event Reports (LER) results were surveyed in addressing the problem. Table I (abstracted from Ref. 1) presents a brief overview of a few of the major accident sequences involving the operator in the control room for which fault trees were developed in the Rasmussen "Reactor Safety Study" (Ref. 4).

It may be observed from the results presented in Table I that even though the number of identified operator faults is small in comparison to the potential hardware failures, an apparently disproportionate share of the failure probability is due to the operator. This was largely the result of assumptions made in the "Reactor Safety Study" (Ref. 4) concerning the effects of stress on the limits of operator performance, based upon the postulated stressful conditions of the accident sequence. As indicated, the critical operator error related sequences were primarily associated with Loss-of-Coolant Accidents (LOCA). Moreover, the sequences were dominated by failures of the high-and-low-pressure injection systems, the containment spray injection system, and a few other related Engineered Safety Feature (ESF) systems. Examination of the fault trees in detail indicated that the identified operator errors were generally related to failure to properly manipulate one (or more) motorized valves, which required manual operation from the control room.

Comparison of the hypothesized fault tree paths with actual incidents involving operator errors taken from LER data produced some interesting observations. The postulated operator errors in the fault trees were dominated by "acts of omission", i.e., failure to perform some required action, such as changing a valve setting for a coolant supply line from a condition where fluid was being drawn from an external source (a tank which ultimately would be pumped dry) into a recirculatory mode of operation. By contrast, the incidents described in the LERs were dominated by "acts of commission", i.e., gratuitous, unexpected, unnecessary actions which were performed ("acts of God").

By their nature, the variety of operator error "acts of commission" which might occur is partially boundless. As a result, it is impractical to expect to catalog acts of commission completely. Development of a complete set of fault trees identifying all possible acts of this type is beyond reasonable expectations.

A classical example of an "act of commission" is found in the reactor trip incident which occurred in the Rancho Seco plant in Sacramento on March 20, 1978. While the plant, a 900 MW_e B&W reactor powered facility, was

TABLE I. MAJOR OPERATOR RELATED ACCIDENT SEQUENCES PWR*

Critical Systems

	Identified Faults			Sequence Probability	Fraction Probability Due to:		
	Operator		Hardware		Operator Error		Hardware
	Control Bd.	Remote			Control Bd.	Remote	
Large LOCA							
Low-Press. Inj. Sys. (LPIS)	4	5	92	2E-8	.52	.07	.41
LPIS + Contmt. Spray Recirc. Sys.	4	7	140	2E-10	.51	Negligible	.49
Contmt. Spray Inj. Sys. (CSIS) + LPIS	4	7	111	5E-11	.33	.12	.55
Small LOCA							
Hi-Press. Inj. Sys. (HPIS)	4	17	166	9E-6	.11	.19	.70
CSIS + HPIS	4	19	185	8E-11	.06	.17	.77

*Based upon results of WASH-1400 (Ref. 4).

operating at a steady state power level of 70%, an operator removed the translucent cover of a back-lighted push button switch from a panel in the control room in order to change the light bulb. The burned-out bulb was dropped by the operator and fell into the open switch socket on the control board console producing a dead short to ground in the switch. Breakers opened immediately on two 24 VDC power supply circuits causing loss of signals for about two-thirds of the non-nuclear instrumentation for the plant and related control parameter indicators including: pressure, flow, fluid levels in steam generators and pressurizers, and all reactor coolant system (RCS) temperatures. Consequent spurious signals from all of the deactivated instrumentation circuits were fed to the Integrated Control System (ICS) for the plant, which caused the main feedwater flow to be automatically reduced to zero. In a manner reminiscent of Three Mile Island, a rapid increase in reactor coolant system pressure occurred when the feedwater flow was cut-off. This in turn automatically produced a reactor trip on the basis of a high-pressure signal to the ICS. Hampered by a lack of instrumentation and an excess of equipment responding automatically to spurious signals, the plant operators had their hands full in trying to maintain reactor control and to prevent substantial damages from occurring to the nuclear steam supply system from a rapid cooldown transient that the reactor experienced. An hour and 15 minutes passed before the operators discovered the location and secondary cause of the power loss in the 24 VDC power supply circuit breakers. Only then were the operators able to restore power to the malfunctioning section of the control panel and regain normal control of the nuclear steam supply system. Nearly two hours passed before RCS pressure and temperature were restored to within permissible technical specification limits.

As an example, the Rancho Seco accident is neither unique, nor extreme in its consequences. The events of Three Mile Island have indicated that accidents of this type can come perilously close to producing a core meltdown. Moreover, the incident demonstrates how the loss of control and vital instrumentation can turn an apparently trivial incident -- dropping a light bulb -- into an unnerving experience.

Upon due consideration, it seems very unlikely that a fault tree would have been identified for an incident initiated by an operator dropping a burned-out indicator light bulb into an open socket with resultant substantial loss of instrumentation and control capability. Thus, probabilistic assessment of the causes of such accidents by the use of fault trees is only effective within a limited framework. This incident serves as a rather classical example of the types of problems associated with establishing the probability and consequent risks of operator errors associated with acts of commission. Perhaps the most meaningful way to attack problems of this type is on the basis of a statistical analysis of operational power plant data through analyses of LERS and other data sources. Certain specific problem areas, such as those associated with valve manipulations, etc., may be amenable to fault tree analysis. As these problem areas are identified, they may be eliminated through subsequent good engineering practices. But in general, the diverse sources for accidents

involving acts of commission can neither be wholly anticipated, nor entirely eliminated. However, some basic observations can be made with respect to areas where improvements in human engineering can help to reduce opportunities for errors.

EFFECTS OF CONTROL ROOM SIZE

As noted above, control boards have become extremely large. Nevertheless, operators generally feel that no superfluous information is provided on the boards. In fact, many operators feel that they need more plant data to aid them during operations. Therefore, elimination of data displays does not appear to be a promising method for reduction in control board size.

Some initial steps have been taken towards an apparently desirable goal of reducing overall control board dimensions through miniaturization of controls and display devices. A few utilities have already proceeded along lines utilizing this approach. As a consequence, the trend to steadily increasing control board and control room size appears to have slowed (and perhaps even reversed). No very dramatic changes in overall control room dimensions are likely to occur from component miniaturization processes alone. In the immediate future generation of control rooms we can expect essentially more of the dimensional status quo.

Meaningful breakthroughs in control board size must come through application of advanced methods of information processing for plant operators. Computer-supported data retrieval and analysis systems, utilizing cathode-ray tube (CRT) data displays, must be developed and become accepted if this goal is to be achieved. In a computer-supported control room, top-level functional plant information would be pictorially displayed on CRTs as the baseline presentation mode in a hierarchically ordered set of processed data displays. Lower priority displays would be subordinated and could be called for by the operator as the need for the information arose. The data retrieval and analysis system would also aid in integration of power plant data into more meaningful formats for the operator which could reduce the opportunities for error on his part. The trend to such advanced systems is clearly in evidence. Several reactor vendors have developed conceptual designs for such systems. However, nuclear plants incorporating the first integrated computer-supported control systems, though under order, are not scheduled to be operational for some time in the future. A clear need exists for development of an advanced, computer-driven information processing system which would be compatible with the concept of retrofittability into existing plants, and which could be included in those to be completed in the near future. Though a retrofitted system would not reduce the size of the control center, it could substantially improve the operator's comprehension of root causes of off-normal conditions and aid in his determination of actions to be taken to alleviate the problems.

CONTROL/DISPLAY COMPONENT SIZES AND LOCATIONS

In current practice, control boards are frequently fabricated with extensive, geometrically-regular, rectangular columns and rows of heavy switchgear and large display components. Such large, undifferentiated arrays of similar (or identical) control and display elements, where the primary distinguishing features are small labels on individual board components, do not represent good human engineering practices. The apparent aesthetic appeal of such arrays to the designer is of small benefit to the operator. Universal antipathy was apparent among operators for this widespread practice.

Although miniaturized controls and data display components may be the wave of the immediate future, plants of the current generation generally use large, heavy switchgear for controls and big meters for instrumentation readouts. Many of these components appear to have been carried over from fossil-fueled facilities to nuclear power plant control rooms. Their continued utilization is representative of a general utility reluctance to experiment with control elements with which they have little experience, where component reliability has not been well established. It is easy to understand this practice in a nuclear power plant where reliability is so important. Nevertheless, if progress is to be made in human engineering of nuclear power plant control rooms, smaller controls must be incorporated into the designs concurrently with the development of computer-driven information processing systems. Some trend setting power plants have made progress in the direction of utilizing smaller switchgear and meters.

Evidence of another related problem area can be seen in some power plants; i.e., visual limitations with respect to data displays. When small display devices are used in large control boards, it is possible to be beyond visual limits for displays, especially if they are not closely spatially correlated with associated controls. During the transitional period to utilization of miniaturized components coupled with conveniently located CRT displays, designers will have to utilize great care to avoid problems of this sort. Proper functional organization and grouping of associated controls and displays will be an essential human engineering practice in this period.

As computer supported data retrieval and analysis systems with CRT displays become accepted practice in future control room design, the problems of exceeding visual limitations for the operator can be eliminated.

The problem of visual limitations is generally associated with a related problem, the lack of spatial correlation between data displays and control devices. As a rule, there were few glaring examples of poor practice in connection with this problem in the control rooms analyzed in The Aerospace Corporation's study. Functional organizations of the control boards appeared to have been a relatively important consideration in the design of most of the plants visited. However, in some instances, it appeared that retrofitted equipment, after the control board was initially fabricated, might have contributed some problems of spatial discorrelation. Adequate human engineering design practices should assure that potential

retrofit requirements are recognized during design and some, well-distributed, extra space incorporated into the plans for control boards and control rooms. Again, the utilization of computer-driven information processing systems, with CRT displays of critical system parameters, can help to resolve problems with such after-the-fact cases of recognition of the need for additional data for plant control.

COLOR CODING OF COMPONENTS AND DISPLAYS

The use of color on a control board is a very beneficial and practical method for aiding in discrimination between adjacent control systems and their associated components. With care in the choice of colors, even most color-blind individuals can distinguish between adjacent dissimilar color tones as they manipulate controls.

With a few notable exceptions, standard color coding is broadly utilized within the industry in indicator lights which show the operational status of systems components. Traditionally, red lights have been used to indicate equipment which is running, valves open, and circuits closed. In plants utilizing this color-coding system, green lights indicate equipment not in operation, valves closed, and circuits tripped. Under normal operating conditions, control boards in which this color coding concept has been applied look like Christmas trees with red and green lights dappling the surface of the board.

Some facilities have incorporated an alternative color coding concept for indicator lights called an "all green board". This practice, borrowed from the Navy, uses green indicator lights for all components that are in their normal operating status, whether valves or circuits are open or closed. When small deviations from normal operation occur in the plant, red lights appear highlighting any malfunctioning components. The concept is useful for normal and near-normal operation. However, when a serious accident occurs, immense numbers of changes occur automatically in the status of operational and safety-related equipment in the plant and the color coding concept becomes totally ambiguous. Confronted by an enormous variety of red and green lights initiated by automatic accident control system sequences, where the color of the light no longer indicates either the proper or improper functional status of equipment, the operator would have only his memory and the plant emergency operating procedures to assist him in assessing the appropriate status of plant components. Under these circumstances, it appears that operators who are accustomed to operating with the traditional red/green indicator light coding concept would be better prepared to cope with the accident and could interpret the information presented more reliably and with less ambiguity.

CONTROL SHAPE CODING

With a few notable exceptions, the use of tactile sensory identification mechanisms has been largely overlooked in the current generation of control rooms. Some control operations require close visual

attention to displays while related controls are manipulated. Under these circumstances, it is certainly poor human engineering practice to use identically shaped control knobs, levers, or push buttons for dissimilar control functions, especially when the control devices are located adjacent to each other. However, numerous examples of this undesirable practice can be found in the control rooms of operational plants throughout the industry. In more than one case, it was apparent that problems had already been perceived and enterprising operators had backfitted nonconventional control knobs, with clear tactile differences, for these critical components.

In the next generation of control rooms using smaller, back-lighted switches (probably in relatively closely-packed arrays), the use of tactile identifiers on switch surfaces could greatly decrease operator error potential.

"MIMIC" DISPLAYS FOR CONTROL SYSTEMS

Control system mimics (logical schematic displays of system relationships between components, switches, functional status indicators, etc.) have long been recognized as valuable tools in control centers. The control boards of older, smaller facilities indicate that mimics were more widely used then than they are in the current generation of large nuclear power plant control rooms. As time went on and control boards became steadily larger, the use of mimics was increasingly neglected. In most of the currently operational, large facilities, mimics are virtually non-existent. However, because they are so useful as memory aids, many operators have configured quasi-mimics out of colored tape on otherwise undifferentiated control panels to support decision making processes.

In the next generation of control rooms, there will evidently be much more widespread utilization of mimics. Of course, when control rooms are designed around CRTs for data displays, mimics will be natural formats for utilization.

FUTURE UTILIZATION OF COMPUTERS AND CRTS

An inevitable (and certainly highly desirable) trend to greater utilization of computers and CRT displays is already apparent in the designs of future control rooms. The debate over computerization seems not to center so much over whether to use computers and CRT displays, but over what the functional interface will be between the operator - the computer - and the control systems. The opinions of advocates of various alternatives range from relegating the computer to a simple data handling system, in which plant control is exercised in a relatively conventional fashion by the operator, to utilizing the computer to essentially take over complete control of the plant.

The most probable application of computers in the control room will no doubt be a compromise between the two extremes, in which computer-aided -- but operator-responsible -- control will be utilized. Under these

circumstances, interactive data/control displays may be provided on CRTs by the computer. This appears to be a flexible, reliable, cost-effective, and safe compromise approach to the problem, and one which has great promise.

OPERATOR CHARACTERISTICS AND TRAINING

On the basis of site visits conducted to a number of operational nuclear power plant control centers, observations indicated that the operators seemed generally competent, well-qualified in their assignments, and adequately motivated. Regular training programs for both initial operator qualification and continuing skill maintenance were being conducted at all plants surveyed. Within the limits of the brief survey conducted, the training programs seemed reasonably adequate -- especially those associated with normal and near-normal operations -- considering the training methods available to the plant operational staffs.

However, capabilites for conducting realistic on-site training for emergency conditions in the power plants were virtually non-existent. Operator "walk-throughs" of emergency operating procedures were essentially the only available method for on-site training in emergency conditions. To overcome this weakness, NRC relicensing requirements call for the operators to have hands-on experience in emergency plant shut downs, either from actual in-plant incidents or from simulated events conducted in an adequate control room simulator. This effectively requires operators to have retraining exercises on a simulator, as most operators will not experience a sufficient number of emergency shutdowns of their own plants to meet the NRC requirements.

Assuming that infrequent emergency shutdowns are representative of reality, the only practical method for operator training in severe emergency procedures is through hands-on training in a realistically modeled control room simulator. If simulators were conveniently available, more frequent training of this type would be desirable. The bi-annual training sessions required by the NRC are less frequent than desirable for skill retention. Unfortunately, the geographic availability of existing simulator facilities is often too limited to permit training sessions to be conducted with a more desirable frequency.

Moreover, the total number of available simulators is so limited in the US that fidelity of control room simulation is a problem. Until recently, there was only one BWR control room simulator in the US, a mock-up of the Dresden 2 unit. In addition to simulating an older plant, with a control board quite dissimilar to those of newer BWRs, the GE-Dresden 2 simulator also employs an "all green board" color coding concept for indicator lights. As previously noted, this color coding concept for indicator lights is not commonly used in most utilities of the US. Although another BWR simulator is now available, a model of the TVA's Brown's Ferry unit, neither of these two simulators are high-fidelity reproductions of other control centers in general. The numbers, availability, and fidelity of PWR simulators is equally limited. The transferability of experience gained in emergency power

plant operations is uncertain for training conducted on simulators with poor fidelity with respect to the physical characteristics of the operator's own plant. This potential problem should present a substantial incentive for either standardization of control rooms, or making relatively high-fidelity simulators more conveniently available to operators in order to assure better training.

The effects of control room human engineering on perceived stress levels were reviewed with respect to the operator's performance in an emergency. It is clear that excessive stress can have very detrimental effects on operator performance. However, at this time, it does not appear to be possible to quantify operator stress levels, in emergencies, or even to be able to quantify the specific influences of factors which might produce calamitous effects through excessive stress. The determination of optimal designs for control clustering and ideal concepts for information codification to reduce stress levels on operators would be extremely difficult, and would require extensive research and development programs. However, careful application of good human engineering would go far toward eliminating design features which contribute to error-proneness such as mirror-imaged control boards for side-by-side, two-unit control centers; or the location of essential data displays outside of the visual limits of operators, etc.

EMERGENCY OPERATING PROCEDURES

Emergency operating procedures (EOP) were analyzed to a limited extent for the plants surveyed with respect to their effectiveness in supporting operator actions under emergency conditions. Though the EOPs examined appeared to be reasonably effective tools for near-stable plant operating conditions, they seemed to be too cumbersome for time-critical, emergency conditions. The formal, written procedures were, of necessity, generally voluminous. Detailed indexing of the material covered in the EOPs was rare. Consequently, the formalized procedures seemed to be of limited value as diagnostic tools for evaluating actions to be taken in emergencies where the root problems may be ambiguously defined. In fact, the voluminous size and cross-referencing inadequacies of the EOPs may reduce the operator to heavy reliance on his memory -- which is quite the opposite of the intended role of the EOPs.

In an emergency, most of the required control functions in the plant would be actuated automatically by safety systems which are part of the Engineered Safety Features (ESF) of the plant. Thus, the principal role which has been defined for the control room operator in an emergency is monitoring and verification of the adequacy of automated ESF component performance. However, no evidence was observed of well-defined measures in the EOPs for dealing with one or more malfunctioning ESF components -- if they should be discovered during the monitoring and verification processes. A general reluctance was observed on the part of NRC and plant personnel to acknowledge that malfunctions could occur in ESF controlled equipment. With the complexity of the ESF systems actuation logic and the number of systems

involved, performing the task of verification of the functional adequacy of the performance of all components is non-trivial -- and it must be assumed that the assignment is meaningful irrespective of any "single-failure" criterion which may have been used for design purposes.

Considering the magnitude of the verification procedures, it is apparent that an operator aid to simplify and expedite the review process is needed. A supplementary "command/response" data display has been recommended for this function. This unit would consist of paired indicator lights which would provide an immediate indication of commands which had been generated by the ESF actuation system and the responses of associated equipment components. With such a system, the operator could tell at a glance whether all actuation system commands had been received; whether the components had functioned properly; and whether final system conditions were consistent with requirements. Most importantly, the "command/response" display system would provide an instant checklist which would minimize mental data integration and EOP memory requirements for the operator and hence opportunities for error. Initial steps have been taken by some reactor vendors to provide the genesis for systems of this sort. For example, a related concept (Valve Position Status Indicators) has been developed and fielded by Westinghouse and is currently in use in some facilities.

In view of the apparent limitations of the EOPs, they may be most useful as source material for operator "walk-through" training exercises in emergency procedures. Though these exercises are not necessarily conducted under real-time conditions, or under stress, they provide the closest simulation of hands-on emergency procedures that most operators will have the opportunity to experience, outside of a control room simulator facility.

OBSERVATIONS AND CONCLUSIONS

This testimony has not been prepared with the intention of giving the impression that control center design has been grossly neglected. On the contrary, the evidence indicates that control rooms in nuclear power plants have received a substantial amount of attention and relatively good engineering judgment has evidently been applied in their design layouts. Reasonably good functional relationships were evident in the control system layouts of most of the plants visited during the course of the Aerospace study. Nevertheless, as discussed above, there is still room for improvement in the application of good human engineering to control panels and data displays. The needs of the operators have all too frequently been subordinated to the designers' inclinations towards the use of symmetry and regularity in control panel design. As a consequence, large rectangular arrays of columns and files of virtually identical controls and displays are common practice in control rooms today. Though mirror-image control boards for dual-unit plants are <u>not</u> commonplace, they should not be considered acceptable practice for control center design in future (or current) licensing procedures. Moreover, color and tactile coding of control elements should not receive more widespread utilization by designers, as these practices justifiably deserve.

With only a few notable exceptions, utilities are reluctant to be innovative in control room design. There was clear evidence of widespread prevalence of an "I don't want to be the buyer of the first model of a new system" syndrome. As licensing/construction periods for plants in excess of ten years have become common, it is easy to understand the desire on the part of utilities for utilization of conservative design technology and components of proven reliability. Utilities simply wish to minimize licensing delays for new plants. They may seek to achieve this objective by making as few innovations from plant-to-plant as possible. The problem is further exacerbated by those interveners whose recalcitrant attitudes towards nuclear plants in general, and innovation in particular, promote replication of dated practices. Consequently, movement in the direction of incorporation of advanced control systems into nuclear facilities is, at best, slow.

The current lengthy schedules for power plant design and construction induce similar serious problems with respect to utilization of advanced computer systems in control rooms. As planning/construction schedules are stretched, technical obsolescence of control room electronic equipment becomes a painfully real prospect, even before plants become operational. Over a 30-40 year life span for the plant, even obtaining replacement parts and performing maintenance may be expected to become a problem for the original computer equipment installed in the facility.

Nevertheless, current computer and electronic equipment technology is adequate to support the implementation of advanced control room concepts. The materials are available which would allow major improvements in human engineering of these facilities. Initial steps have been taken toward their utilization, but advanced hardware is still a long ways from achieving operability in control rooms. Additional steps need to be taken to encourage the incorporation of computer-supported data analysis and control systems into nuclear power plants in a more rapid and meaningful manner.

What steps can be taken to expedite improvements in human engineering in control rooms? For one thing, it seems clear that regulations will be required to assure that fundamental human engineering requirements are always included in control room designs. Only in this manner can there be an adequate basis for enforcement of good human engineering practices. However, the standards which are being developed for control room human engineering, upon which NRC regulations might be based, have been slow in coming. These processes of standards development need to be accelerated, and higher priorities should be attached to their completion.

From the standpoint of expediting advanced control room development, innovative approaches need to be taken for encouraging the incorporation of advanced designs into plans for power plants. As a suggestion for the direction which might be taken, the NRC should provide licensing incentives for advanced concepts. These might take the form of a preliminary Regulatory Guide which would demonstrate NRC support for utilization of advanced design

approaches. In addition, some stronger encouragement of progress towards stepwise standardization of control room design could also be given by the NRC. Among other benefits, standardization would reduce the problems of providing sufficient numbers of simulation facilities, with adequate control board fidelity, for operator training.

Plant design practices should be reviewed with respect to the problems associated with the rapid rates of technological advances in computers and electronic equipment for use in the control room. The potential for technical obsolescence occurring in electronic hardware over the lifetime of the plant is real. In order to reduce the obsolescence potential, a special attempt should be made to maximize the flexibility of the scheduling of the final selection of control room computer systems while the plant is under construction. Delaying the final selection of the hardware for the computer-supported systems until the close of the licensing/construction period should permit deployment of equipment which will have substantially greater computational and data handling capacity, relatively lower costs, and fewer maintenance problems.

To help overcome the natural reluctance of utilities for developing and debugging the first computer-supported data analysis and control systems, perhaps a joint utility, industry, NRC-supported program might be developed which could assist in overcoming the initial operational system problems. In addition, support should be given to the development of a concept for an advanced information-processing and display system which could be retrofitted into existing nuclear power plants. A system of this sort could take advantage of the most recent advances which have been made in computer hardware and the most recent developments in software for the provision of creative and meaningful control system displays.

Experimental studies should also be conducted on the effects of incorporating advanced concepts into control rooms on the reliability of operator performance in emergencies. This data would be of evident value in supporting and evaluating the designs of advanced control systems.

Whatever steps are taken in the future with respect to improved reactor safety, advances in human engineering are needed in control rooms. Incorporating them may only increase the standards of control room excellence from what is now an equivalent "B" level grade to an "A", but the efforts to reduce opportunities for operator error and improve plant reliability will certainly be cost-effective in the long run. The problems which occurred in the control center at Three Mile Island have demonstrated the need for greatly improved information processing systems. Improvements are also needed in training which will reduce the operator's transition time under emergency conditions from the automaton level (in which he mechanically performs only prescribed functions) to that of a creative problem-solver -- the only meaningful level for man's intervention in the control center of a nuclear power plant.

48-721 O - 79 - 18

REFERENCES

1. FINLAYSON, FRED C., HUSSMAN, JR., T.A., SMITH, JR., K.R., CROLIUS, R.L., AND WILLIS, W.E., "Human Engineering of Nuclear Power Plant Control Rooms and Its Effects on Operator Performance", The Aerospace Corporation, Report No. ATR-77(2815)-1, February 1977.

2. USAEC, "Summary of Abnormal Occurrences Reported to the Atomic Energy Commission During 1973", Report No. OOE-OS-001, May 1974.

3. US NUCLEAR REGULATORY COMMISSION, "Reactor Safety Study", WASH-1400, October 1975.

4. COLEY, W.A. AND DARKE, R.S., "Operator Interface Requirements for Nuclear Generating Stations - A Review and Analysis", Proceedings of Specialists Meeting on Control Room Design, IEEE 1975 Summer Meeting, p. 77.

COLLEGE
OF
ENGINEERING

DEPARTMENT OF NUCLEAR ENGINEERING SCIENCES

REPLY TO
UNIVERSITY OF FLORIDA
DEPARTMENT OF NUCLEAR ENGINEERING SCIENCES
202 NUCLEAR SCIENCES CENTER
GAINESVILLE, FLORIDA 32611
AREA CODE 904 PHONE 392-1401

May 17, 1979

Honorable Don Fuqua
Committee on Sciences and Technology
U.S. House of Representatives
Rayburn House Office Building
Washington, D. C. 20575

Dear Mr. Fuqua:

In response to your letter of May 3, 1979, I am pleased to offer my recommendations as to the direction we should take to improve the engineered safeguards facilities for nuclear power plants.

When it comes to "safety" of nuclear power plants, the number one requirement is safety of the population, and the number two requirement is safety of the plant itself. Not only is this is required by present regulations, but is the practice that has been followed by the nuclear industry from its beginnings.

Title 10, Part 50 of the Code of Federal Regulations specifies conditions the engineered safeguards facilities must meet during the postulated maximum credible accident, that is the "large pipe break" in the primary system. The containment vessel must contain all radioactivity to protect the population and the Emergency Core Cooling System (ECCS) must be capable of keeping the maximum fuel-tube temperature below 2200°F. The ECCS is designed to meet this specification. Other limits are: oxidation of fuel-tube not to exceed 17% of thickness and hydrogen production not to exceed 1% of the amount that oxidation of all the fuel-tube could produce.

The adequacy of the containment vessel to contain the radioactivity even with some controversial interference by the operators has been demonstrated by the recent Three Mile Island (TMI) accident.

The hard fact is that any accident that leads to a partially uncovered core shortly after shutdown from full power operation may cause severe oxidation and mechanical damage to the fuel-tubes releasing fission products into the primary coolant. Fission products in the primary loop can escape into the containment building as at TMI resulting in a costly clean-up and repair situation.

We must analyze every existing nuclear power plant to determine its vulnerability to such costly clean-up and repair that can arise from credible scenarios less than the "large pipe break," similar to the TMI

MAY 21 1979

situation. I believe this can be done with an acceptable cost increase in any new plants that may be found to have inadequate protection and at higher costs in any existing plants requiring retro-fitting. Additional briefing and training of operators and limiting their options during emergencies is also in order. A remote controlled vent line from the top of the reactor vessel, a direct reactor core water level indicator, among other minor changes, should also be considered. The ongoing loss-of-flow-test (LOFT) program should be of considerable value in providing data on which to base decisions.

I have been in the nuclear business from its beginnings. I am not committed pro or con to nuclear energy; in my view nuclear energy always has had to, and must continue to, prove that it can be utilized safely and it must, of course, be economical.

With the above accomplished so that after any failure, recovery efforts and costs will be minimized, the reactor owners and the public will have reason for renewed confidence in nuclear energy as a part of our national energy selfsufficiency strategy.

I appreciate this opportunity and hope the above will be helpful. If I can be of assistance in any way, please feel free to call on me.

Respectfully submitted,

Glen J. Schoessow
Professor of Nuclear
Engineering

A. Wm. Snyder
Director
Nuclear Fuel Cycle Programs

Sandia Laboratories
Albuquerque, New Mexico 87115

June 8, 1979

The Honorable Mike McCormack
Committee on Science & Technology
U. S. House of Representatives
Suite 2321, Rayburn House Office Building
Washington, DC 20515

Dear Congressman McCormack:

Please find enclosed the written testimony for your hearings on Nuclear Reactor Safety requested in your recent letter to Dr. D. A. Dahlgren. This material concerns the interaction of molten LWR core material with water and concrete--the subject in which you expressed specific interest.

Some time ago Dr. Dahlgren undertook another assignment not directly related to this area. The material which we are submitting was compiled by Dr. Marshall Berman who supervises investigations at Sandia Laboratories relating to molten LWR core material interactions with concrete and water and Dr. Glen Otey, the Manager responsible for these activities. Please call Dr. Berman, (505) 264-1545, or Dr. Otey, (505) 264-9945, if we may be of further assistance.

Sincerely yours,

A. Wm. Snyder

Enc.

Testimony for the Record of the May 22-24, 1979 Hearings on Nuclear Reactor Safety for U.S. House of Representatives Science and Technology Subcommittee on Energy Research and Production

By:

Marshall Berman, PhD, Supervisor,
Reactor Safety Studies Division

and

Glen R. Otey, PhD, Manager,
Light Water Reactor Safety Department

Sandia Laboratories
Albuquerque, New Mexico 87185

Molten LWR Core Material Interactions with Water and Concrete

Introduction

The Nuclear Regulatory Commission sponsors research investigations at Sandia Laboratories on the interaction of LWR molten core material with water and concrete. The objectives of the research are to identify, characterize and quantify the physical phenomena postulated to occur in meltdown accidents. The primary goal is to obtain sufficient understanding of the safety-related phenomena so that they may be modeled and predicted within reasonably conservative bounds.

The concern in meltdown accidents is ultimately with containment failure. The molten core/concrete interaction is a threat in this regard for several reasons. Reactor containment can be breached by erosion of the molten core through the concrete sump. Another threat, which is possibly more serious to containment integrity, is posed by the gases generated during the melt attack on the concrete. The gases may cause the structural limits of the containment building to be exceeded either by direct pressurization or by the overpressure due to a detonation since combustible gases are evolved in the chemical processes of melt attack. Steam explosions are considered a threat to containment because of the direct overpressure associated with this phenomenon and because of the possibility that projectiles launched by the explosion can cause local breaching.

If containment is breached radioactive materials may be released to the biosphere in the form of noble gases, low boiling point vapors, aerosol particulates and, in the case of core erosion through the foundation, dissolved species leached from the fuel materials, by groundwater. The discussion provided herein deals with the work underway at Sandia concerning breaching of containment by mechanisms associated with core melt phenomena. The consequences of the containment being breached by these various phenomena is not discussed since it has not been a part of this investigation.

Melt/Concrete Interactions

The Sandia program has shown that gases liberated from concrete during interaction with molten reactor core materials are responsible, in large part, for the safety related phenomena during a meltdown accident. These gases alter the mode of melt attack on concrete, transport energy into the containment building, enhance the risk of explosion within containment, cause pressure to build within the containment, and enhance the release of aerosols from the molten core materials.

The exploratory studies of melt/concrete interactions undertaken to date have been fairly broad in scope. Detailed information is available on the rate and mechanism of melt attack on concrete and consequently the rate of gas generation. More refined information is needed on the following topics:

A) Gas phase reactions that yield explosive or flammable mixtures within containment,

B) Aerosol generation by gases passing through the melt,

C) Aerosol decay, agglomeration and deposition within containment.

Gases liberated from the concrete by the action of a melt are carbon dioxide and water vapor. As these gases pass up through the melt they are chemically altered to carbon monoxide and hydrogen. As these reduced gases cool within containment, they can further react to yield methane and higher hydrocarbons. Such reactions would be considerably aided if materials within the reactor containment act as catalysts. Explosion hazards within containment have traditionally been considered only in terms of hydrogen. The possibility of a methane explosion has received less attention.

As gases pass through the melt they accentuate aerosol formation either by sparging particulate from the melt or by creating particulates mechanically. Exploratory information indicates that gas-assisted aerosol formation may be ten times as efficient as thermal aerosol generation. Further, a significant fraction of the aerosol comes from sources other than the reactor fuel. Little information is available on the details of the mechanisms of aerosol formation from the melts and especially the influence of melt composition on aerosol formation.

Once aerosols form they immediately begin to agglomerate. When this agglomeration has proceeded far enough, the aerosol particles will sediment out of the containment atmosphere. Details of these processes with prototypic aerosols are completely unknown. Factors that should be considered include:

A) Rate of aerosol agglomeration

B) Influence of water droplets or vapor on aerosol behavior

C) Impaction and retention of aerosol on surfaces

D) Sedimentation of aerosols.

A limited program to consider some of these features in the piping system of a reactor is underway at Sandia under NRC sponsorship. A more ambitious program to study aerosol behavior in containment has been initiated in the Federal Republic of Germany.

If a core melt erodes the foundation of a reactor, it will come into contact with the soil. Exploratory studies have indicated that the thermal front preceding the melt will dry the earth prior to melt contact. However, once the melt solidifies it will again be innundated with ground water. This water will leach radioactive materials from the solidified melt.

Since gas generation during melt/concrete interactions is a source of numerous hazards, a candidate method for improving safety would be to replace concrete as the material lining the reactor sump. Concrete might be replaced by a material which, as a minimum, would not yield gaseous products when exposed to a melt of reactor core materials. Additional safety could be

achieved if the material was relatively immune to melt attack or would dilute and cool the core melt.

A limited exploratory study of candidate materials to replace concrete has been initiated. Candidate materials may be categorized as:

A) Refractories which would contain the melt until it had solidified. Examples are MgO, ZrO_2, UO_2.

B) Sacrificial materials which would dilute and cool core melts. Examples are borax, basalt, and magnetite.

These melt retention materials greatly mitigate the safety hazards posed by gas generation. They do not eliminate hazards produced by aerosol generation. In summary, the preliminary information from this exploratory study indicates that:

A) There are materials which might be used to line sumps that are very resistant to erosion by molten core material and which would greatly mitigate hazards due to gas generation.

B) The erosion resistant materials investigated offer promise as a means for retaining the molten core within containment but do not substantially mitigate aerosol generation.

The continued efforts in this program will be directed to improving the data base for the above topics as they relate to release of radioactive materials. One area that is not being

studied in the current program is the effect of reflooding the melt with coolant. As with the existing data base for melt/concrete interactions, the current program concerning core retention materials is being conducted for the purpose of risk assessment. The results may be useful for identifying possible engineered safety features.

Steam Explosions

When a hot melt and water come into sudden contact and the temperature of the melt greatly exceeds the vaporization temperature of the water, a violent release of steam may result. This phenomenon, which is believed to be due to the fragmentation of the hot melt allowing a very rapid transfer of heat causing vaporization of the surrounding water, is known as a steam explosion. In a reactor meltdown accident, contact between molten core materials and water could take place in the bottom of the reactor vessel or in the sump beneath it.

A steam explosion following a fuel melt accident is of concern since it introduces additional mechanisms for breaching containment. Three such postulated mechanisms are:

A) Failure of containment due to the direct overpressure from the explosion,

B) Penetration of containment by projectiles launched by the steam explosion,

C) Failure of containment due to combustible gas (e.g., hydrogen) detonation initiated by the steam explosion pressure pulse.

Sandia is investigating, under NRC sponsorship, various phenomena associated with steam explosions. Triggering of these explosions is being studied in small scale experiments (~ 10g) using core melt simulants. Intermediate scale (1-25 Kg) experiments have been performed in open geometry to measure the thermal-to-mechanical energy conversion efficiencies. A closed geometry test facility is presently being constructed to extend these efficiency tests to a broader and more representative set of materials and to improve the accuracy of the measurements. Analytic efforts are underway to: 1) model the fragmentation processes; 2) estimate the work efficiencies; 3) develop scaling models; and 4) estimate the probability of containment breaching due to the direct overpressure from steam explosions or from penetration by projectiles launched by steam explosions.

The program at Sandia is in an early stage. The results to date indicate that steam explosions may be likely under hypothetical fuel melt accident conditions. On the other hand,

the experiments indicate that multiple explosions, which greatly spread the energy release in time, occur frequently. The estimated efficiencies for observed explosions were all at least an order of magnitude less than the maximum theoretical value. Thus, the achievement of maximum theoretical efficiencies in extremely large, coherent explosions appears to be unlikely. These results are, of course, of a preliminary nature. The work planned over the next two years should provide a firm technical basis for assessing the probability of containment breaching by steam explosions.

IN REPLY PLEASE ADDRESS:
1901 L Street, N.W., #711
Washington, D.C. 20036

AMERICAN INSTITUTE
OF CHEMICAL ENGINEERS

May 24, 1979

Mr. Ian Whyte
Committee on Science and Technology
B-374 Rayburn House Office Building
Washington, D.C. 20515

Dear Ian:

As you requested, the American Institute of Chemical Engineers is pleased to submit the enclosed paper on "Relative Health and Safety Impacts of Coal and Nuclear Electric Power Generation" for the Subcommittee on Energy Research and Production's hearings on nuclear reactor safety.

The paper was written by Dr. Walter Meyer, Professor and Chairman of the Nuclear Engineering Department at the University of Missouri-Columbia, and will provide an interesting dimension to the hearing record.

Sincerely,

Ted

T. J. Hamilton

OFFICERS-1978: J.Y. OLDSHUE, PRESIDENT · J.G. KNUDSEN, VICE PRESIDENT · J.C. FORMAN, SECRETARY · W.R. MARSHALL, TREASURER · W.H. CORCORAN, PAST PRESIDENT
DIRECTORS: L.L. FELLINGER · S.E. ISAKOFF · P.H. McNAMARA · M.P. SKILLERN · F.A.M. BUCK · H.W. FLOOD · R.H. MARSHALL · E.A. WEINMAN · B.C. DOUMAS · T.H. GOODGAME · H.M. RODEKOHR · C.R. VANDER LINDEN

RELATIVE SAFETY IMPACTS

I would like to examine the safety aspects of electric power generation in the context of the energy resource choices that are available generally in the United States, i.e., coal and nuclear. Unfortunately much of the analysis of nuclear safety issues has not been presented* in the broad context of the alternative choices. Frankly, it is necessary that we examine these two alternatives in comparison with one another and fortunately for this consideration a number of such analyses have become available particularly in the last ten years. An attempt will be made here to bring a number of these analyses together and summarize them for your review.

One of the more important recent documents examining nuclear power health and safety in the context of the coal alternative is Nuclear Power Issues and Choices.[1] Quoting from this report of the Ford Foundation Nuclear Policy Study Group, "The use of nuclear power to generate electricity inevitably results in risks to human health. The extent of these risks is uncertain and the subject of considerable controversy. To be meaningful in connecting the public policy decisions, these risks cannot be considered in isolation but must be compared with the risks associated with coal-fired power plants which are the principal alternative for electric power generation for the rest of this century."

I. The Potential Means of Electrical Power Generation

The potential means of electrical power generation have to be examined from four different perspectives: first, technical feasibility within the

---

[1] Nuclear Power Issues and Choices, Report of the Nuclear Energy Policy Study Group, sponsored by the Ford Foundation, administered by the Mitre Corporation, Ballinger Publishing Company (1977).

*Emphasis added.

timeframe in which the added generating capacity is required; second, reliability of the technically feasible means; third, cost of generation by the various means; fourth, the future availability of fuels for the feasible means, and fifth the health and safety impacts. Here we will limit our explanation to the first and fifth points.

A. Present Practical Means of Electrical Power Generation

Historically, fossil fuels including coal, oil and natural gas offered the technically feasible means of providing energy and generation of electrical power. A recent addition to the technically viable means of electric power generating includes nuclear fission. Because of increasingly severe shortages of supply and government mandate, natural gas and oil will in fact no longer be available for added generation capacity.

Coal is the fuel used in generating the major fraction of electrical power in the U.S. today. Larger capacity coal-fired systems employing advanced combustion systems in an attempt to achieve improved overall efficiency and reduced pollutant emissions are being designed and constructed. The questions of the technical viability of coal concern the practicality of achieving acceptable emission byproduct controls and containment, establishing the necessary transportation system between the mines and generating stations, and locating, opening and operating the necessary mines. Emission and byproduct control, and containment will be discussed in detail here.

With respect to the control of emissions from fossil plants the primary objectives of controls up to this time has been directed at relatively large sizes of particulates and sulfur dioxide. Particulates are removed from the stack gases using various types of filters or precipitators. The use of filters

RELATIVE SAFETY IMPACTS

I would like to examine the safety aspects of electric power generation in the context of the energy resource choices that are available generally in the United States, i.e., coal and nuclear. Unfortunately much of the analysis of nuclear safety issues has not been presented* in the broad context of the alternative choices. Frankly, it is necessary that we examine these two alternatives in comparison with one another and fortunately for this consideration a number of such analyses have become available particularly in the last ten years. An attempt will be made here to bring a number of these analyses together and summarize them for your review.

One of the more important recent documents examining nuclear power health and safety in the context of the coal alternative is Nuclear Power Issues and Choices.[1] Quoting from this report of the Ford Foundation Nuclear Policy Study Group, "The use of nuclear power to generate electricity inevitably results in risks to human health. The extent of these risks is uncertain and the subject of considerable controversy. To be meaningful in connecting the public policy decisions, these risks cannot be considered in isolation but must be compared with the risks associated with coal-fired power plants which are the principal alternative for electric power generation for the rest of this century."

I. The Potential Means of Electrical Power Generation

The potential means of electrical power generation have to be examined from four different perspectives: first, technical feasibility within the

---

[1] Nuclear Power Issues and Choices, Report of the Nuclear Energy Policy Study Group, sponsored by the Ford Foundation, administered by the Mitre Corporation, Ballinger Publishing Company (1977).

*Emphasis added.

is generally limited to small generating stations, 100 MWe or less with the electrostatic precipitators used on large stations. The devices used are generally effective with routine operating efficiencies over ninety percent on coals with high sulfur contents (greater than one percent)*. With low sulfur (less than 0.7 percent) coals which also have higher ash contents, precipitators are inefficient. High ash and low sulfur[2] content combined with reduced precipitator efficiency significantly increase the cost of handling the particulates or fly ash for plants fired with low sulfur coal.

Once the precipitator collected particulates are removed from the stack gases, they must still be disposed of. For a 1000 MWe station particulate disposal may amount to a volume of thirty (30) or more 100 ton (nominal) coal cars each day. This material contains lead, telerium, antimony, cadmium, selenium, zinc, vanadium, arsenic, nickel, chromium, sulfur, berrylium and manganese, concentrated in the smallest particle sizes[+3], all of which are known to be toxic to man at some low level. However the tolerable body burdens for each of these elements are unknown.[2] Disposal of coal wastes will be discussed in more detail later but it would seem prudent that these materials should be disposed of in some type of permanent disposal site that would prevent release of these materials to the biosphere (a clay pit or other disposal site that would prevent leaching of the toxic materials into the

---

*It should be noted however that with a 99% efficient precipitator, a 1000 MWe (2800) MWth) power station would discharge approximately 6,500 tons of particulate to that atmosphere each year.

[2]E. Piperno, "Trace Element Emissions: Aspects of Environmental Toxicology", in S.P. Babu, Trace Elements in Fuel, American Chemical Society Advances in Chemistry Series, Washington, D.C. (1975).

+The smaller the particle the more biologically active is the particle.[3]

[3]R.E. Lee, S.S. Gorandau, R.E. Enroine and G.B. Morgan, Environmental Science Technology, 6, 1025 (1972).

biosphere would be required). The volume of the material to be disposed of in the thirty year life of the plant would be 15,500 acre feet (26 million cubic yards). The State of Illinois is sufficiently concerned with this problem that state laws controlling solid waste disposal are being interpreted to prevent noncontained discharge of fly ash and bottom ash to the biosphere. The cost and design of the necessary contained disposal sites are just beginning to be estimated.

It should be noted that if precipitators are used they will not prevent significant dissemination of the volatile toxic metals, mercury, lead, arsenic, cadmium, vanadium, selenium, antimony, zinc and others to the biosphere. The potential health effects of these materials will be discussed later.

It might be expected that the use of a flue gas scrubber system would reduce both sulfur and trace element emission from fossil fueled power stations as compared with plants fitted with precipitators only. However, the lack of proven scrubber technology,[4] is preventing the determination of what reductions in trace element emissions might in fact be realized. The effluent from scrubbers still has a similar potential for biosphere contamination as does fly ash. For a 1000 MWe power plant burning 2 to 2.5 percent sulfur coal over a thirty year life, 6100 acres (9.5 square miles) of storage pit five feet deep would be required unless effective means of water drainage can be developed. This acreage would be required in addition to those approximately 22,000 acres that would be necessary for the coal inventory typical of a 1000 MWe coal-fired station.[5]

---

[4] H. S. Rosenberg, et. al., "Processing SO_2: The Status of SO_2 Control Systems," Chem. Engr. Prog., 71, 66-71 (1975).

[5] "Comparative Risk-Cost-Benefit Study of Alternate Sources of Electrical Energy," USAEC, WASH-1224 (December 1974).

Coal fired power stations will also yield sulfur and other volatile trace elements that can be partially controlled with precipitators but the ultimate disposal problem of the precipitated waste still remains. Most analyses of the total impact of fossil fueled electrical power generation stations to date have neglected the environmental impact of disposing of precipitated or scrubbed waste. At the same time extensive efforts have been made to evaluate the impact of nuclear electric power generation including the total fuel cycle.

II. Background: Public Health Effects and Occupational Fatalities and Injuries from Coal and Nuclear Electric Power Generation

Much has been written about the potential public health consequences of the improbable nuclear meltdown accident but relatively little attention has been paid to a comparison of the health affects accompanying the routine operation of commercial fossil fueled stations with the routine operation of nuclear stations or for that matter with the nonroutine accident situation attending the operation of a nuclear power plant. Several studies of this type, completed by 1973, indicate that a substantial additional cost should be levied against the operation of fossil stations to account for health and environmental effects accompanying routine operation. Following in Tables 1, 2 and 3 are EPA 1970 estimates of the damages resulting from air pollutants.[6] In terms of the cost of damage alone it is expected that the 1970 costs noted would have to be increased by a ratio of about 220/126

[6] T.E. Waddel, "The Economic Damages of Air Pollution", Socio-economic Environmental Studies Series, Environmental Protection Agency, EPA-600/5-74-012, pp. 130-131 (May 1974).

Table 1: Contribution to Air Pollution

by Fuel Combustion in Stationary Sources[6] ,(*)(+)†

Pollutant	Total Tons ($x10^3$) emitted/year by all sources	Amount emitted by fuel comb. in stat. sources	Percent emitted by fuel comb. in stat. sources
Carbon Monoxide	148.7	0.8	0.54%
Particles	26.1	6.8	26.1%
SO_x	33.9	26.5	78.2%
Hydrogen Chloride	34.9	0.6	1.2%
NO_x	22.8	10.0	43.9%
Total	266.4	44.7	--

*Derived from Table 20 "Estimates of Nationwide Emmissions 1970 from J.H. Cavender, D.S. Kircher, and A.S. Hoffman, Nationwide Air Pollution Emission Trends 1940-1978, Publ. No. AP-115, EPA, Research Triangle Park, January 1973.

+Stationary Sources are defined as public utility and industrial power plants, commercial and institutional boilers, and residential furnances.

†This column does not total to 100 because the values above are for each particular pollutant; the total is for all of the pollutants.

Table 2. National Costs of Pollution Damage, by Source and Effect, 1970
($ billion)

Effects	Transportation	Stationary source fuel combustion*	Industrial processes	Solid waste	Agricultural burning	Misc.	Total
Aesthetics & soiling	0.2	3.1	2.0	0.1	0.2	0.2	5.8
Human health	0.1	2.2	1.7	0.2	0.2	0.2	4.5
Materials	0.6	0.8	0.3	*	*	*	1.7
Vegetation	0.2	*	*	*	*	*	0.2
Total	1.1	6.1	4.0	0.3	0.4	0.4	12.3

*Negligible

*Stationary sources are defined as public utility and industrial power plants, commercial and institutional boilers and residential furnaces.

Table 3. National Costs of Air Pollution Damage, by Pollutant and Effect, 1970
($ billion)

Effect	SO_x			Particulate			O_x[a]			CO	Total		
	Low	High	Best	Low	High	Best	Low	High	Best	Best	Low	High	Best
Aesthetics & soiling[b,c]	1.7	4.1	2.9	1.7	4.1	2.9	?	?	?	*	3.4	8.2	5.8
Human health	0.7	3.1	1.9	0.9	4.5	2.7	?	?	?	?	1.6	7.6	4.6
Materials[c]	0.4	0.8	0.6	0.1	0.3	0.2	0.5	1.3	0.9	*	1.0	2.4	1.7
Vegetation	*	*	*	*	*	*	0.1	0.3	0.2	*	0.1	0.3	0.2
Animals	?	?	?	?	?	?	?	?	?	*	?	?	?
Natural environment	?	?	?	?	?	?	?	?	?	?	?	?	?
Total	2.8	8.0	5.4	2.7	8.9	5.8	0.6	1.6	1.1		6.1	18.5	12.3

Notes:

[a]Also measures losses attributable to NO_x.

[b]Property value estimator

[c]Adjusted to minimize double-counting

?Unknown

*Negligible

(ratio of cost indexes in 1978 to 1970) to account just for price increases since 1970. Using the national costs of Table 2 for pollution damage caused by stationary source fuel combustion, the price index corrected value is 10.6 billion dollars in 1978. This estimate does not take into account possible expansion in the number of pollution sources since 1970 or improvements that might have occurred in pollutant control since 1970. An estimate published by EPA[7] in 1974 shows that damage due to SO_2 and particulates amounts to 11.2 billion dollars per year in 1974 dollars (or 14.9 billion dollars in 1978 dollars).

In Table 4 following is a comparison between the environmental and health effects resulting from the routine operation of coal and nuclear power systems. These results show substantial costs in both dollars and lives if coal is substituted for nuclear power systems. These costs should be accounted for in evaluating the total costs of using fossil fuel systems. Replacing nuclear power capacity with coal fired systems would cost the lives of about 20 to 100 persons each year over those that would be lost if nuclear generating systems were used. These additional deaths would continue for the lives of the coal fired plants, or about 30 years. In addition there would be significant economic losses if the coal alternative were selected. It is also worth noting that many of the fatalities and economic losses would occur to persons who derive no direct benefit from the electric power generated, i.e., the pollutants would be carried beyond the service area of the persons using the electrical power.

---

[7] A.L. Dare, "What's a Scrubber", Office of Public Affairs (A-107), U.S. Environmental Protection Agency, Environmental Facts (October 1974).

Table 4: Annual Health Effects and Occupational Fatalities and Injuries Resulting from Electric Power Production of 1000 MWe from Coal and Nuclear Fuels

Category of Effect or Injury	Nuclear	Coal
Industrial Injuries (Deaths)	0.49/year[12]	3.05[11]
Operations Related Injuries (non-lethal industrial accidents in all parts of the program)	517 days off/year[10]	8330[10]
Pneumoconiosis (Black Lung Disease)	----------	100 miners totally[10] incapacitated at any given time with 6 new cases/year
HEW Payments to Black Lung Victims	----------	4.46 million dollars/year[10,12]
Excess Deaths of the Public Due to Atmospheric SO_2	----------	20-100 fatalities/year[10]
Effects due to Acid Rain on Buildings, Land, etc.	----------	30 million dollars/year[7,10,11+]

*This number includes an allowance for the effect on the public of the low probability nuclear calamity, meltdown accident, as well as accidents to workers in nuclear power plants and uranium miners including radiation exposure. The majority of these deaths are mining accidents.

+EPA research cited in reference (7) indicates that sulfur oxides and particulates cause $11.2 billion per year in damage. Rose states 61 percent of the sulfur effluents come from electric power plants.[10]

[11] L.C. Lave and Freeburg, L.B., "Nuclear Safety", Vol. 14, pg. 409 (September-October, 1973).

[12] D.J. Rose., "Nuclear Eclectic Power", Science, 184, 351-359 (April 19, 1974).

Figure 1 following shows the mortality data from chronic respiratory disease prepared by the Environmental Protection Agency and used by the National Academy of Sciences in their 1975 study of fossil fuels.[8] The "best judgment" line neglects (probably properly) early London and Oslo data and forms the basis of the NAS and EPA mortality estimates. Acid sulfate levels in eastern U.S. urban areas are 16-19 $\mu g/m^3$, which are apparently safe if the best-judgment line applies strictly and if there is a real threshold at 25 $\mu g/m^3$, as shown. Dr. David Rose of MIT in evaluating these results states however, "But few would feel satisfied to live so close to danger, especially in view of large uncertainties in the data and of environmental fluctuations."[9] Using Figure 1, the EPA has estimated that, if the 1975 SO_2 standards were all met, the excess mortality in 1980 owing to SO_2 would be very small--in the order of one death, or less, per power-plant-year. This number is comparable to the nuclear-plant hazard.

Figure 2 shows an anomaly with respect to suspended sulfates and their effect on cigarette smokers. In general pollutants will act synergisticaly with the cigarette smoke to produce enhanced disease effects. This is an apparent exception to that general rule.

Rose observes further, "If, however, the 1975 air standards are not met or are significantly relaxed, the numbers of deaths climb spectacularly--to about 4,500 in 1980 or some 20 deaths per 1,000 MW coal-fired plant per year. If the "mathematical best fit" of Figure 1 is assumed to apply instead (a pessimistic assumption), the 1980 deaths jump to about 100 per plant-year from air-quality deterioration alone. Such statistics overwhelm the nuclear risks of every kind."

---

[8] Air Quality and Stationary Source Emission Control, National Academy of Sciences (1975).

[9] D.J. Rose, P.W. Walsh and L.L. Leskovjan, "Nuclear Power Compared to What?" American Scientist, Vol. 64, 291-299.

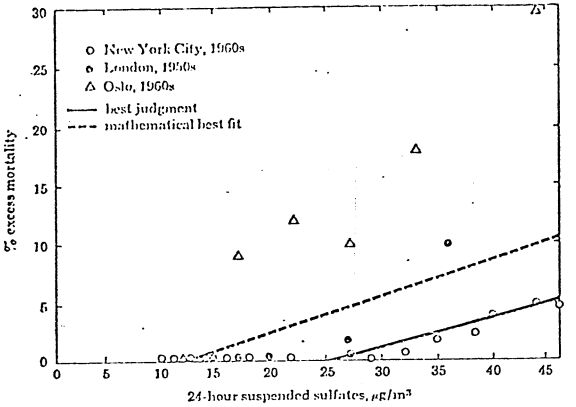

Figure 1. The percentage of expected excell mortality owing to acid sulfates in the air is estimated from suspended particulates and sulfur dioxide levels in three cities. The "mathematical fest fit" line is currently considered to be a pessimistic assumption. (Data from EPA, summarized in Ref. 8.)

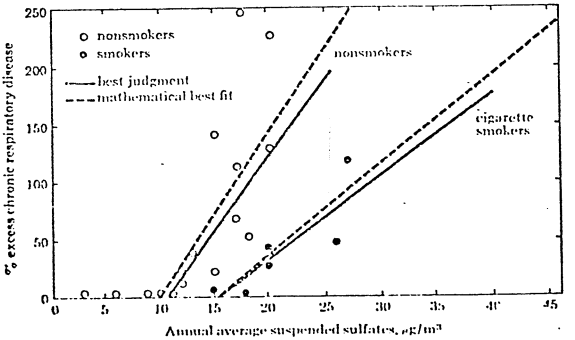

Figure 2. The excess chronic respiratory disease expected from acid sulfates has a threshold at 10 μg/m^3 for nonsmokers and 15 μg/m^3 for cigarette smokers. The data is based on studies in five areas and on the pooled results from the Community Health and Environmental Surveillance System program for 1970-71. (Data from EPA, summarized in Ref. 8.)

With regard to an analysis similar to that in Table 4 completed by Dr. Rose,[10] he states as follows: "What are we to conclude? The exact numbers are uncertain but the general trend is clear. Apparently if we continue to burn coal in the same way as in the past, or aggravate the problem by increasing coal production and relaxing environmental standards, we are in for a great deal of trouble. The predicted total excess deaths in 1980 due to this acid sulfate cause alone, vary from a few--under stringent sulfur-removal conditions--to as much as 4,500 according to one EPA estimate, or as much as about 60,000 according to a different source. Those numbers translate to about 20 - 100 deaths per year for each (coal fired) electric power plant--about 20 to 100 times the mortality associated with all phases of nuclear power, as presently judged. In addition, we find vast non-fatal health effects."

An extensive analysis of the total impact of using coal, oil and gas in comparison with light water nuclear reactor power systems is provided in WASH-1224.[5] This document shows for example that the costs of pollution abatement for coal and oil stations amount to respectively 30 million and 11 million dollars per year in comparison to a cost of 3-4 million dollars per year for a light water reactor station of the same size. Total environmental and health effects of coal plants are noted to be three times more costly than those for nuclear stations while oil is 1.6 times more costly than nuclear. It should be noted that these costs do not include public health effects of air borne fossil

[10] D.J. Rose, "Nuclear Versus Fossil Fuel Power", Massachusetts Institute of Technology, Cambridge, Mass. (1975).

pollutants such as SO_2, NO_x, particulates, trace metals, etc.* Table 4 shows these latter costs would be very high.

The health effects of nuclear power systems have been studied in detail over many years. However the situation with regard to the health effects of the combustion of fossil fuels is quite different. We have some knowledge of the consequences of the excessive exposure to the common products of combustion and even some knowledge of effects of exposure to trace elements resulting from such combustion, but we have not yet, particularly with regard to the trace elements, been able to define tolerable body burdens for these combustion products.[1] As a result of this lack of information we cannot accurately predict the long-term effects of exposure of large populations to combustion products.+ Even short term effects are difficult to define in a consistent manner that different analysts can agree on. Analysis of daily death figures in the U.S. suggest to some that 2 to 3 percent of such deaths are a result of air pollutants. Other analysts using the same data argue that the proper figure is 14 percent of daily deaths.[13]

---

*There has been debate concerning the effects of all these pollutants. Early reports tended to indicate significant health effects. Later these reports were attacked as exaggerating the consequences of the presence of these materials in the environment. However more recent reports tend to confirm the existence of a substantial basis of concern over atmospheric pollutants (see Chemical Engineering News: May 5, 1975, pg. 5; June 9, 1975, pg. 4 and 20; September 1, 1975, pg. 30; September 29, 1975, pg. 17; and January 26, 1976, pg. 7).

+Note EPA has moved to curb air pollutants emitted by new copper lead and zinc smellers when studies have shown a higher than average number of lung cancer deaths among people living near arsenic emitting smelters.[13]

[13] Chemical and Engineering News, pg. 7 (January 26, 1976).

It must also be noted that the intrusion of the products of combustion on our lives is not through the air alone but also through our food and water. The seepage of trace elements from coal and ash piles, scrubber sludge ponds and the fallout of airborne particulates into surface and ground waters and then into the food chain, is recognized as a potential source of degenerative disease in man.[1] The effort to quantify the effects is however certainly in its infancy.

In contrast with this risk in 1975 the American Physical Society published an independent evaluation of the accident risks in commercial nuclear power plants.[15] This study shows that for the PWR-2 reference accident, in the words of Dr. Wolfgang Panofsky of the APS study staff, "As far as an individual in the exposed population is concerned his risk of dying of cancer would be increased by 0.1 percent over the normal 20 percent likelihood".[16]

This last sentence is particularly important. An individual in the exposed population following an improbable nuclear accident with significant radiation release (the APS study attributes a probability of one chance in 200,000 reactor years to this accident) the probability of developing cancer changes by only 0.1 percent over the normal 20 percent cancer incidence statistics that apply in the U.S. At the same time we simply tolerate a stiuation where 2 to 3 percent to 14 percent of daily deaths in the U.S. are a result of air pollutants. The fraction of these pollutants due to stationary power plants is about 32 percent. Therefore, we ignore a situation where fossil fueled

---

[15] "Report to the APS by the Study Group on Light Water Reactor Safety", Reviews of Modern Physics, Vol. 47, Supplement No. 1 (Summer 1975).

[16] Letter from Wolfgang K. H. Panofsky to Congressman Morris K. Udall (May 9, 1975).

power plants routinely produce from about 1 percent to 4.5 percent of daily deaths, a figure 10 times greater than the result of the improbable nuclear accident.

As noted earlier an important recent study of the relative health and safety risks of nuclear power was provided by the 1977 Ford-Mitre Nuclear Energy Policy Study Group. This study examined all aspects of the health impacts of nuclear power including mining, milling, mill tailings, transportation, conversion and fabrication, normal reactor operation, impact of core melt accidents, reprocessing and recycling of uranium and plutonium and finally waste management. Taking the most pessimestic view of routine reactor operation would produce 1.0 expected deaths per reactor year. Taking the most pessimistic view of the probabilities and consequences of nuclear power plant melt down accidents would be about 10 fatalities per reactor year for a 1000 MWe power plant. But here and I quote from the report, "It is significant that even under such extreme assumptions, the fatalities are less than the high end of the range of estimated deaths associated with coal-fired power plants, discussed below. As the discussion in Chapter 7 stresses, this is not a prediction but a limit to which no probability is attached. It is used solely to give an upper bound on the range of estimates that are possible."

"A further important consideration arises if the estimate of health risk is to be used not as an index of present performance of nuclear power plants but as a guide to making a future choice between nuclear and coal or other energy sources for electricity generation. The central average rate-of-loss estimate in WASH-1400 of 0.023 fatalities per reactor year derives largely from about 10 percent of the 100 reactors surveyed. Indeed, more than half its value is probably contributed by only a few reactors whose location with respect to dense populations is such that certain weather conditions at the time of

accident could expose very large populations and thereby lead to unusually large numbers of presumptive fatalities. Thus, to the extent that reactors could be located at less potentially risky sites, the average rate-of-loss risk for a particular new reactor could be lowered by a factor of 10 to 100. Therefore, even the higher risk probabilities that could possibly enlarge the WASH-1400 values upward toward an average rate-of-loss of 10 latent cancer deaths per reactor year could be reduced by prudent site selection to average values that are low relative to other contributions of the nuclear fuel cycle."

With respect to coal the Ford-Mitre report states as follows:

"For new coal-fired plants meeting new source standards, this analysis indicates a range of premature deaths from occupational and public effects of the coal fuel cycle and the effluents of coal combustion in the range of two to twenty-five per year for a 1,000 MWe plant. These numbers could be reduced by the use of lime scrubbers alone or in conjunction with low-sulfur coal or by the use of other new technology, such as fluidized bed combustion.

Despite these large uncertainties, the general conclusion is that on the average new coal-fueled power plants meeting new source standards will probably exact a considerably higher cost in life and health than new nuclear plants. However, both coal and nuclear power plants built in the rest of this century could have much reduced health risks relative to existing plants. This can be accomplished in the case of coal plants by limiting sulfur dioxide and other emissions in conformity with present or improved air quality standards and by prudent siting; and, in the case of nuclear power plants, by improved siting and safety controls. In the immediate future, a major effort should be made to improve the assessments of the health

48-721 O - 79 - 20

effects of the pollutants from coal combustion. The most pressing demand, however, would appear to lie in upgrading the research and development directed at the reduction of the adverse health effects associated with coal-fueled power plants."

Van Horn and Wilson of the Harvard University Energy and Environmental Policy Center have examined the relative effects of coal and nuclear from the point of view of estimated past impacts. This analysis therefore does not include any allowance for a nuclear accident that would affect the public. There just haven't been any accidents of this type.[17]

Table 5 following presents the results of Van Horn and Wilson. These results are based on the generation of 750 x 10^6 Mwh of electric power by nuclear power plants operating in the period from 1967 to 1976. The health impact of this nuclear generated power is evaluated and compared with what impacts would be calculated to have occurred if the nuclear generated power had been replaced by a mix of natural gas, coal and oil fired electric generating plants. The power was proportioned between the different types of fossil plants based on the fraction of electric power generated by each type of plant nationally. Again a very significant coal impact is noted compared to nuclear.

Van Horn and Wilson state as follows with respect to the figures in Table 5:

"In summary, largely because of wide dispersal of sulfates, the air pollution fatalities for fossil fuels given in Table 1 are an underestimate by about a factor of three. Consequently, the additional deaths which would have resulted in the United States

[17] A. Van Horn and R. Wilson, "Will the Past be Prologue?" Public Utilities Fortnightly, February 3, 1977, pp. 43-45.

TABLE 5

ESTIMATED U.S. FATALITIES FROM 750 MEGAWATT-HOURS ELECTRIC POWER GENERATION (1967-December, 1976)[17]

	Replacement Fuel Mix				
	Natural Gas Fired	Coal Fired	Oil Fired	Total Replacement Fossil Fuels	Total Nuclear Fuels
Fatalities	(180×10^6 Mwh)	(420×10^6 Mwh)	(150×10^6 Mwh)	(750×10^6 Mwh)	(750×10^6 Mwh)
Extraction	2.5	60-500	2.0	52-500	11-31
Transport	--		1.1	1	--
Processing	0.25	(2)+(620)	23+(180-2,500)	25	57
Transport	0.6	62-190	1.1	62-190	--
Electrical Generation (air polution)	(-)	185-6,200	23-2,250	210-8,500	11-91
Waste Disposal	--	(640)	--	(640)	--
Total Fatalities (references[18,19])	3.5	940-7,500	45-2,250	1,000-10,000	80-189
Total Per Year Per 1000 MWe Plant	0.119	13.7-109	1.84-91.9	--	0.654-1.54
Total (reference[20])				11,300	

[18] "The Health and Environmental Effects of Electricity Generation", Biomedical and Environmental Assessment Group, BNL report 20582 (1974).

[19] L.D. Hamilton, "Health Effects of Air Pollution", BNL report 80743 (July 1975).

[20] R. Wilson and W. Jones, Energy, Ecology and the Environment, Academic Press, New York (1974).

from replacing nuclear power by fossil fuel electricity generation up to December, 1976, is in the range of 1,900 to 27,500 deaths, and a little more than twice this worldwide. The low-fatality figure is for exclusive replacement by the lowest sulfur fuels and the high figure is for high-sulfur fuels. If we assume the epidemiology of air pollution is roughly correct, the actual sulfur content of fossil fuels burned in existing power plants indicates that the number of fatalities is likely to have been in the upper half of this range. In 1975 alone, the estimated excess deaths would have been between 400 and 6,000. The numbers we have quoted are only for mortality and do not include morbidity."

With respect to morbidity the USEPA reports that the numbers for air pollution morbidity are five times the mortality figures.[21]

In 1976 the House of Delegates of the American Medical Association requested an evaluation of the health hazards of nuclear fossil and alternative energy generating sources.[22] These evaluations were to include effects on both employees in generating plants and to the general population. A summary report was released in June 1978.

The report observes that despite varying degrees of difficulty, quantitative assessments have been made of the mortality-morbidity associated with each of the fuel cycle components. The report draws on some thirteen supporting documents to arrive at its conclusions.

The results of the study are summarized in Tables 6 to 10. The data in Table 6 reflect the deaths and injuries in coal mining, including coal

---

[21] "Health Consequences of Sulphur Oxides: CHESS report 1970-71", USEPA, EPA-650/1-74-004, (May 1974).

[22] "Health Evaluation of Energy Generating Sources", Report of the AMA Council on Scientific Affairs; AMA House of Delegates, June 21, 1978.

workers pneumoconiosis, train accidents and the mortality and morbidity of air pollution from coal fired generating plants. Similarly Table 7 includes estimates of deaths and injuries in uranium mining as well as fractional death and morbidity estimates for the other components of the nuclear fuel cycle. It does not include estimates of the effects of a catastrophic nuclear accident.

The AMA report states, "On the basis of these tabulations, a coal-fired power plant each year results in from 48 to 285 times more deaths than does an equivalent nuclear power generating station, 2-3 times more than an oil-fired plant and 36-1120 times more than one fueled by natural gas."

If the upper limit of the nuclear statistics in Table 8 is augmented by the upper limit of 10 deaths for the catostrophic nuclear accident from the Ford-Mitre report[1] the upper limit of the death impact of coal is still 28 times higher (a ratio of 314 to 11.1) than that for nuclear. Again we see a very severe relative impact from the routine use of coal fired plants.

The AMA report states as follows:

> "In summary, this brief report provides a range of estimates of the occupational and non-occupational health effects of several predominant modes of electric power production. It appears that coal and nuclear power will be the principal fuels for electric power production in the next 25 years. At the present time, coal has much greater adverse impact on health than does nuclear power production, and efforts need to be directed toward reducing both the health and adverse environmental impacts of all forms of energy production."

Much concern of course exists regarding the catastrophic nuclear accident. But at the same time there is significant and growing concern in scientific

TABLE 6: ESTIMATES OF HEALTH EFFECTS OF COAL FUEL CYCLE[22]

Procedure	Occupational Deaths*	Occupational Injuries and Disease*	Non-occupational Deaths*
EXTRACTION			
Accidents	.45 - 1.24	22. - 80.	
Disease	0.00 - 4.8	0.6 - 48.	
TRANSPORT			
Accidents	.055 - 1.9	.33 - 23.	.55 - 1.3
PROCESSING			
Accidents	.02 - .05	2.6 - 3.1	1. - 10.
POWER GENERATION	.01 - .03	0.9 - 1.5	
Air Polution			.067 - 295.
T O T A L	.54 - 8.0	26. - 156.	1.62 - 306.

*Per 1000-MWe per year

TABLE 7: ESTIMATES OF HEALTH EFFECTS OF NUCLEAR FUEL CYCLE[22]

Procedure	Occupational Deaths*	Occupational Injuries and Disease*	Non-occupational Deaths*
EXTRACTION			
Accidents	.005 - 0.2	1.8 - 10.0	
Disease	.002 - 0.1		
TRANSPORT			
Accidents	.002 - .005	.045 - 0.14	
PROCESSING			
Accidents	.003 - 0.2	0.6 - 1.5	
Disease	.013 - 0.33		
POWER GENERATION			
Accidents	.01	1.3	.01 - .16
Disease	0.00 - 0.1		
T O T A L	.035 - .945	3.7 - 13.	.01 - .16

*Per 1000-MWe per year

TABLE 8: COMPARISON OF HEALTH EFFECTS OF ALTERNATIVE FUEL CYCLES FOR ELECTRIC POWER PRODUCTION*[22]

EFFECT	COAL	OIL	NATURAL GAS	NUCLEAR
Occupational deaths	0.54 - 8.0	0.14 - 1.3	0.06 - 0.28	0.035 - 0.945
Non-Occupational deaths	1.62 - 306.	1. - 100.	---	0.01 - 0.16
Total deaths	2.16 - 314.	1.1 - 101.	0.06 - 0.28	0.045 - 1.1
Occupational impairments	26. - 156.	12. - 94.	4. - 94.	4. - 13.

*Per 1000-MWe

TABLE 9: COMPARISON OF HEALTH EFFECTS FOR ALTERNATIVE FUEL CYCLES FOR ELECTRIC POWER PRODUCTION IN U.S. IN 1975[22]

Fuel	1975 KWhe x 10^9	Equivalent No. of 1000-MWe Plants	Estimated Deaths		Estimated Occup. Impairments
			Occup.	Non-occup.	
Coal	844	128	69. - 1024	207. - 39168	3330 - 20000
Oil	292	44	6. - 57	44. - 4400	530 - 4100
Gas	297	45	3. - 13	---	180 - 1080
Nuclear	168	26	0.9 - 25	0.3 - 4	100 - 340
T O T A L	1601	243	79. - 1119	251 - 43572	4140 - 25000

TABLE 10: ENHANCED RISK OF DEATH PER YEAR FROM ELECTRICITY PRODUCTION*[22]

AGE	NORMAL RISK OF DEATH/YR.	ENHANCED RISK OF DEATH PER YEAR**	
		Coal & Oil	Nuclear
10	1 in 3800	1.38 in 3800	1.0008 in 3800
25	1 in 700	1.07 in 700	1.0001 in 700
45	1 in 200	1.02 in 200	1.00004 in 200
65	1 in 40	1.004 in 40	1.000008 in 40
All ages	1 in 100	1.01 in 100	1.00002 in 100

*Adapted from Comar and Sagan[+]

**Risk of death per year from natural gas as fuel for electric power production is equivalent to the normal risk (column 2)

[+]C.L. Comar and L.A. Sagan, "Health Effects on Energy Production and Conservation", Annual Review of Energy, 1, pp. 581-600 (1976).

circles that the increasing use of fossil fuels can produce a world wide catastrophy. The AMA report states as follows:

> "The long-term effects of carbon dioxide production from combustion of fossil fuel have not been considered here. Each 1000 MWe coal plant discharges 7.5 to 10.5 million tons of CO_2 per year to the atmosphere and the load from hundreds of fossil fuel plants may be greater than the atmosphere and the oceans can absorb. Predictions have been made of increased global atmospheric temperatures that might eventually result in drastic changes in climate with unanticipated health effects."[23]

An excellent review of the CO_2 problem was provided by Chemical and Engineering News in October 1977 (See Figure 3).[24] The data indicate that the CO_2 concentration is definitely increasing but what the effects will be is still in question. The fact that they are in question of course argues we should be cautious and prudent.

A rather broad consensus therefore exists that coal produces a generally greater environmental impact than nuclear power.

"No matter how you look at it, said John O'Leary, administrator of the Federal Energy Administration and the man who will direct coal conversions for President Carter, a coal-fired power plant is more hazardous to health than a nuclear fired plant."[25]

This consensus also indicates that the uncertainties about the effects of coal are large and possibly we are in our present efforts at controlling the health effects of coal not attacking the most significant problems at all.

---

[23] R.L. Gotchy, "Health Effects Attributable to Coal and Nuclear Fuel Cycle Alternatives.", NUREG-0332 (1977).

[24] W. Lepkowski, "Carbon Dioxide: A Problem of Producing Usable Data", Chem. Engr. News (October 17, 1977).

[25] The Washington Post (Monday, June 6, 1977).

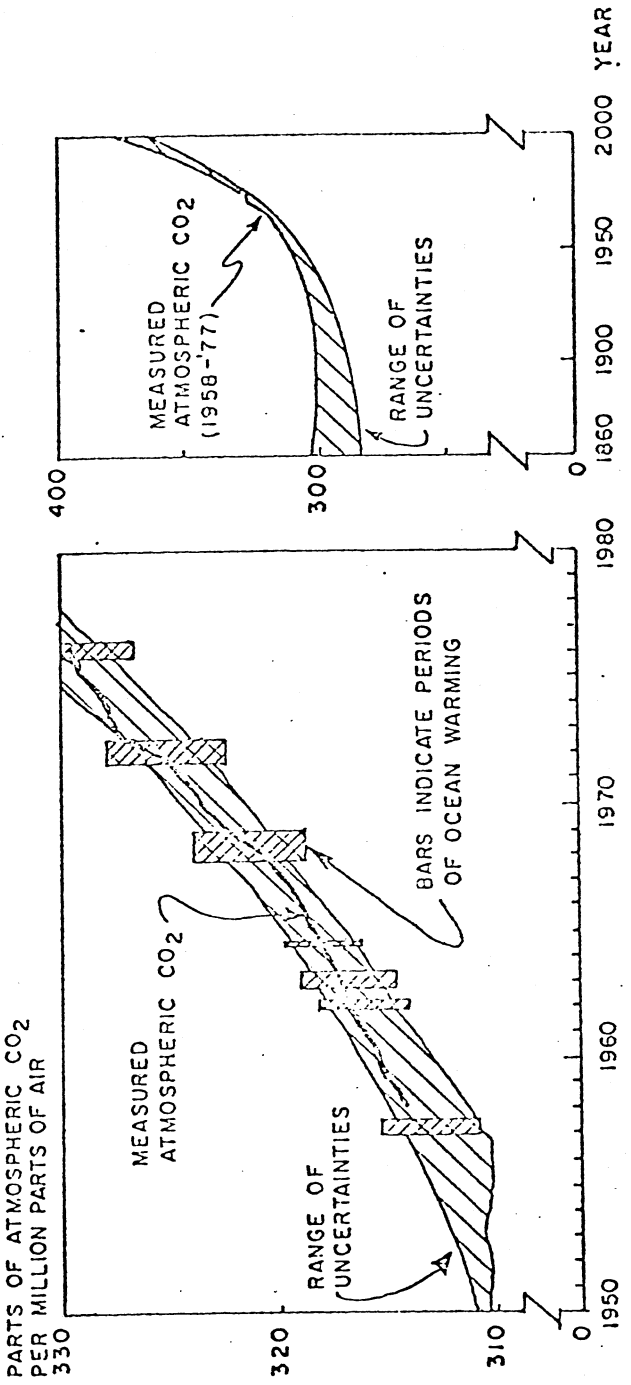

Figure 3. Change in Atmospheric CO_2 Levels with Time.

III. Where Are We Going in Controlling Coal Pollutants

The problems of air pollution from fossil fuels in general but coal in particular we have believed in the past to be problems of particulates and sulfur dioxide gas and sulfate sols. The problem of man made particulates dates back to the beginning of the industrial revolution. In 1307 the King of England issued a proclaimation against the use of coal. The proclaimation in part stating as follows:

> "--we have learned that, whereas previously the makers of kilns in the aforesaid city and village and their neighbourhood were in the habit of using brush-wood or charcoal for their kilns, they are now again, contrary to their usual practice, firing them with and constructing them of sea-coal, from which is emitted so powerful and unbearable a stench that, as it spreads throughout the neighbourhood, the air there is polluted over a wide area, to the considerable annoyance of the said prelates, magnates, citizens and others dwelling there, and to the detriment of their bodily health."

As industrialization grew so did the levels of pollution from fossil fuel use. By the 1900's this pollution became a major national problem in the industrialized nations of the world.

Today the situation is both better and worse than it was in 1900. Beginning in the 1950's many industries switched from using coal to the clean-burning fossil fuels, oil and natural gas. In many places they were cheaper than coal, easier to handle and clean. Also the use of electrostatic precipitators, cyclone filters, bag houses and scrubbers were introduced.. On the other hand however the world was continuing to industrialize and thus the world wide burden of pollutants is increasing and it is becoming obvious that the pollution does not have to be produced next door to produce a decay in the quality of the local environment. Glacial ice samples in Greenland have yielded lead particles presumably from auto emissions in North America. Lakes in Minnesota and on the Canadian side of the border as well as in upstate New York are becoming increasingly acid due to airborne sulfates formed across the United States. The Norwegians are concerned over industrial emissions from great Britian and Western Europe that have lowered the ph in Norwegian streams to the point they will no longer permit the rainbow trout to breed that these waters were once famous for. The present high costs of oil and gas and their likely future

shortage in the U.S. are also forcing us to turn away from these fuels and attempt to burn what are essentially dirty fuels if possible in a clean manner. Thus we face a future with probable increasing levels of air pollution and secondary water pollution. At the same time there are growing questions about exactly what pollutants are producing health affects and what the mechanisms of these effects are.

Flue gas scrubbers have been developed that will of course reduce the level of SO_2 below what it would be otherwise but these systems still are technically flawed. As Chemical and Engineering News reports in a recent review:[26]

> "Whatever else may be said of utilities' switching to coal from oil and gas, there is still only moderate enthusiasm over the ways and means of controlling sulfur dioxide emissions from boilers and other combustors. Scrubbers currently are the most popular way, but by legislation and economics they seemingly have been all but forced into a service for which they may not be at all suited.
>
> The original scrubbing systems were based on calcium hydroxide/calcium carbonate slurries to absorb the sulfur dioxide. Reaction in the slurries yields calcium sulfate precipitate. The precipitate is difficult to handle, causes maintenance problems because of the tendency to plug lines and fittings, and the sludge is difficult to dispose of. Some sodium-based processes have been developed in the laboratory that show potential. Magnesium oxide wet systems and some other dry systems also are under investigation, but the present technology is dominated by the calcium systems."

---

[26] "New Scrubbers Tackle SO_2 Emissions Problem", Chem. Engr. News, Nov. 6, pg. 24, (1978).

"About 90% of all the systems in place are based on calcium absorbents. At least 10 vendors offer systems. As difficult as they may be to operate, the slurry systems are generally regarded as the best proven technology."

In a recent state of the art report in the utility industry magazine, Combustion, a report of actual scrubber performance shows that as flue gas flow rate increases the SO_2 removal rate drops from 73 percent to 60 percent or lower.[27] Also the particulate removal rate averages below 99 percent which means that per 1000 MWe plant more than 6,500 tons per year of particulates are escaping and in fact these may be the most dangerous particulates because they fall in the respirable size range, i.e., they will be drawn into the lungs and some will be retained there.

Another question has risen about scrubbers. This concerns the disposal of the scrubber byproduct sludge. As a recent article notes:[28]

"The removal of SO_2 and particulates from flue gas converts an air pollutant to a solid waste. In particular, utilities are faced with the treatment and disposal of these wastes. It has been predicted that 45 million metric tons/year (50 million short tons/year) of fly ash and 24 million metric tons/year (26 million short tons/year) of Flue Gas Desulfurization (FGD) sludge will be generated during 1980-1985. Land disposing this material represents the least expensive and most popular means of removal."

"Although pumping raw sludge to ponds appears attractive, upon examination the material would utilize approximately 2.5×10^7

---

[27] K. Green, L. Conrad, J.R. Martin and W.H. Kingston, "Commitment to Air Quality Control", Combustion, 50, pp. 12-18 (October 1978).

[28] R.W. Goodwin and R. J. Gleason, "Options for Treating and Disposing of Scrubber Sludge", Combustion, 50, pp. 37-41.

to 7.4 x 10^7 m^3/year (2-6 x 10^4 Acre-feet/year) during 1980-1985. Furthermore, EPA's present position on land disposal, as stated by former EPA administrator Train, is, "EPA considers permanent land disposal of raw sludge to be environmentally unsound"."

Scrubber sludge in addition to its cumulative large volume has other problems. The material does not settle out of the water used to entrain it to settling ponds. Thus, ponds that were supposed to be useful for the 30 to 40 year lives of power plants may only be useful for 25 percent or less of that life unless some very strong measures are taken. Such measures include vacuum filtration of the sludge. This would add a cost of $2.16 per metric ton of sludge or a cost of $97.2 million dollars per year to the costs of rate payers if 45 million metric tons of sludge are produced nationally per year.

Finally there are problems with sludge disposal. The sludge contains portions of the trace elements that were present in the original coal. Some of these are now in a soluble or other transportable form that will permit them to enter the biosphere. Water percolating out of sludge disposal ponds will carry this material into the ground water and then potentially into drinking water supplies.

Because of this growing problem the Environmental Protection Agency is preparing regulations on scrubber sludge disposal. The following information was reported in the August 1978 issue of, Electric Light and Power: [29]

"The Environmental Protection Agency is planning to crack down on disposal of sludges generated by flue gas sulfur scrubbers. Right now there are no federal regulations governing sludge disposal and most utilities merely pond or landfill untreated sludge."

"The first move may come this summer, warns EPA chemical engineer, Julian Jones, with publication of federal regulations under the

[29] EPA Readies Regulations on Scrubber Sludge Disposal", Electric Light and Power, pp. 29-32 (August 1978).

Resource Conservation & REcovery Act of 1976. The law requires EPA to regulate emission of hazardous substances not covered by water pollution control legislation. "At this point," says Jones, "flue gas desulfurization waste and fly ash as yet have not been declared hazardous, but they're both suspect." An evaluation from the Office of Solid Waste is due this fall."

"EPA has a dozen research projects underway to measure the dangers posed by scrubber sludges and to evaluate control techniques. Tests at the Shawnee station of TVA have already shown that leachate from deposits of untreated scrubber sludges have concentrations of disolved solids that violate drinking water standards."

"The agency feels that strict standards are needed because of the booming growth in coal-fired generating capacity projected for the next decade and the associated increase in sulfur scrubbers and sludge. Capacity with scrubbers will climb from the current 10,000 MW to 55,000 MW by the mid-80's. By then, 30 million tons of scrubber waste will be produced every year with more than 60 million tons of fly ash, according to Jones."

"There is little potential for converting scrubber sludge into useful products, says the EPA engineer, so it has to be dumped somewhere. a few utilities are able to put it into empty mines and some coastal utilities are interested in ocean dumping, he adds, but most of the sludge will have to go into conventional landfills or ponds. The problem facing EPA, says Jones is to develop rules to make sure that sludge dumping is environmentally acceptable."

The Electric Power Research Institute states as follows with respect to sludge wastes:

> "There is industry concern that power plant wastes may be classified as hazardous under these tests; if the regulations and the tests become final early next year, the cost of disposing of any hazardous utility solid waste might reach $90 a ton. For an industry that churns out 60 million tons of waste a year, the implications are in the multibillion-dollar range. As Kurt Yeager, director of EPRI's Fossil Fuel Power Plants Department, explains, if all utility wastes are declared hazardous, disposal costs under draft regulations could nearly equal utility fuel costs."[30]

While there have been no catastrophic nuclear power accidents there have been catastrophic incidents stemming from the burning of fossil fuels. In October 1948 a pall of pollution settled over Donora, Pennsylvania. Before it lifted twenty people were dead and 6000 were ill. Almost half of Donora's population, 43%, were stricken. In London in 1952 a similar event occurred and in this case thousands died and many thousands were made ill. How can we ignore such events. Other similar deadly events occurred again in London and also Oslo Norway.

In each of these cases the culprit was a combination of combustion gases and particulates; a combination we call smog or in scientific terms an aerosol. Those small particles (0.2 μm or smaller) that bypass scrubbers or electrostatic precipitators and the volatile gases that are unaffected or bypass both types of devices are the problem. The problem does not yet have a solution because the technology that may be applicable is just beginning to be developed.

---

[30] "Disposal and Beyond," EPRI Journal, 3, pp. 36-41 (1978).

Table 11 presents data on particle sizes and concentration of elements found in air samples taken in the vicinity of the University of Missouri-Columbia power plant.[31] It should be noted that a number of elements classified as carcinoginic or toxic are present and the concentrations on particles of a respirable size are large. The health impacts of the deposition of particles of these sizes with these concentrations of trace elements remains to be determined.

An element that epitomizes the question marks that exist with respect to heavy metal air pollution is arsenic. Arsenic is of course recognized by many to be toxic and at the same time there is evidence it may be an essential trace element in man and other animals. However, the preponderence of clinical and epidemiologic studies indicates arsenic is a human carcinogen. Arsenic is a component of coal and recent measurements indicate that man made air pollution is the primary source of arsenic in the air.[32]

In the evaluations presented in Table 11 no attempt was made to determine the presence of organic materials that may have been present in the stack gas effluent. It is known that traces of the carcinogenic agent benzo(a)pyrene are present as are dioxins (including PCB's). The health impact of this class of compounds is yet to be determined. Also present are small amounts of radioactive materials including uranium, thorium and their radio decay products. Although the amounts of these radioactive materials are small the estimated amounts are from 50 percent higher to several times higher for the reference coal plant compared to the reference nuclear plants.[32]

---

[31] M. L. Reed, "Selenium Airborne Particle Emissions From Coal Fired Electric Generating Plants," A Masters Thesis, University of Missouri-Columbia (August 1978).

[32] "Pollution Main Source of Arsenic in the Air," Chem. Engr. News, pg. 19 (November 27, 1978).

[33] J.P. McBride, R.E. Moore, J.P. Witherspoon and R.E. Blanco, "Radiological Impact of Airborne Effluents of Coal and Nuclear Plants", Science, 202, 1045-1050 (December 1978).

60%

TABLE 11.

MULTIPLE ELEMENT CONTENT AND CONCENTRATION PER CASCADE IMPACTOR STAGE

STAGE	V	Al	Ti	Cr	Mg	Na	Mn	Cl	Ca	As	Zn	Sb	Cr
1	139 ng 65 ppm	66 ug 31,841 ppm	5 ug 2,336 ppm	495 ng 231 ppm	19 ug 8,879 ppm	9 ug 4,006 ppm	970 ng 453 ppm	5.3 ug 2,477 ppm	261 ug 121,960 ppm	37 ng 17 ppm	875 ng 409 ppm	10.5 ng 5 ppm	65 ng 30 ppm
2	71 ng 60 ppm	39 ug 33,051 ppm	3 ug 2,542 ppm	719 ng 609 ppm	14 ug 11,864 ppm	5 ug 4,237 ppm	741 ng 628 ppm	4.1 ug 3,475 ppm	168 ug 142,370 ppm	29 ng 25 ppm	408 ng 959 ppm	8.5 ng 7 ppm	73 ng 62 ppm
3	50 ng 74 ppm	20 ug 29,412 ppm	2 ug 2,941 ppm	860 ng 1,265 ppm	6 ug 8,824 ppm	3.5 ug 5,147 ppm	503 ng 740 ppm	2.7 ug 3,971 ppm	82 ug 120,530 ppm	20 ng 29 ppm	865 ng 1,272 ppm	8 ng 12 ppm	51 ng 75 ppm
4	23 ng 79 ppm	8 ug 27,586 ppm	~0.7 ug ~2,500 ppm	652 ng 2,248 ppm	~2.4 ug ~8,276 ppm	2 ug 6,900 ppm	214 ng 738 ppm	1.5 ug 5,172 ppm	24 ug 82,760 ppm	12 ng 41 ppm	392 ng 1,352 ppm	6 ng 20.6 ppm	31 ng 107 ppm
5	10 ng 55 ppm	2 ug 11,111 ppm	~0.5 ug ~2,700 ppm	347 ng 1,930 ppm	~1.8 ug ~10,000 ppm	1.3 ug 7,222 ppm	85 ng 472 ppm	0.9 ug 5,000 ppm	4 ug 22,200 ppm	9 ng 50 ppm	244 ng 1,356 ppm	6 ng 34 ppm	73 ng 406 ppm
6	12 ng 75 ppm	1 ug 3,570 ppm	~0.1 ug ~430 ppm	364 ng 1,264 ppm	~0.5 ug ~1,785 ppm	0.9 ug 3,214 ppm	66 ng 236 ppm	0.7 ug 2,500 ppm	~2 ug ~7,000 ppm	16 ng 57 ppm	370 ng 1,322 ppm	10.5 ng 38 ppm	50 ng 179 ppm
7	23 ng 73 ppm	0.6 ug 2,000 ppm	~0.1 ug ~430 ppm	559 ng 1,880 ppm	~0.9 ug ~3,000 ppm	1.0 ug 3,333 ppm	61 ng 203 ppm	0.9 ug 3,000 ppm	~1 ug ~3,300 ppm	27 ng 90 ppm	615 ng 2,050 ppm	17 ng 57 ppm	16 ng 53 ppm
FF	23 ng 30 ppm	1 ug 1,195 ppm	~0.2 ug ~ 238 ppm	2,613 ng 3,111 ppm	~1.6 ug ~1,900 ppm	4.7 ug 5,600 ppm	90 ng 107 ppm	10.0 ug 11,900 ppm	~3 ug ~3,600 ppm	36 ng 43 ppm	767 ng 913 ppm	27 ng 32 ppm	52 ng 62 ppm

IV. Summary

The large scale combustion of fossil fuels for energy production has been common practice in the industrialized nations of the world for many years. The by-products of that combustion, soot, smog and ashes are accepted as a problem but at a nuisance level. We know that the by products of combustion are harmful but we accept them to a large degree because we are simply used to the problem; we believe we can tolerate the situation. The evidence presented here however shows that this nuisance has on a number of occasions caused catastrophic single events but more importantly it exacts a continuing significant daily toll of death, disease and property damage and we have yet to develop the technological tools to deal effectively with the problem.

Comparisons have been provided to show the relative impacts of the use of coal and nuclear power. A well supported scientific concensus exists that shows coal under the best circumstances is only competitive with light water nuclear power systems in health effects but in general including allowance for the catastrophic nuclear plant accident, coal fired power stations produce significantly greater negative health impacts than do nuclear plants of the same size.

It is likely that technology to lessen the health impacts of coal and nuclear power systems will be further developed in the future. But the technology required is significantly more advanced in the case of the nuclear system with the development of improved coal systems having to wait upon the identification of the most significant polluting agents and the means of their control.

STATEMENT ON

"NUCLEAR POWER PLANT
SAFETY AND RELIABILITY"

TO THE
SUBCOMMITTEE ON ENERGY RESEARCH AND PRODUCTION

COMMITTEE ON SCIENCE AND TECHNOLOGY

UNITED STATES HOUSE OF REPRESENTATIVES

BY

HILTON U. BROWN, III
CHAIRMAN, ENERGY COMMITTEE
INSTITUTE OF ELECTRICAL AND ELECTRONICS ENGINEERS

Institute of Electrical and Electronics Engineers
2029 K Street, N.W.
Washington, D.C. 20006
202-785-0017

The Energy Committee of the Institute of Electrical and Electronics Engineers (IEEE) appreciates this opportunity to submit its views to the House Science and Technology Committee Subcommittee on Energy Research and Production on the issue of the safety and reliability of nuclear power plants. As you know, the IEEE has long been on record in support of nuclear power. At the present time about 30% of our nation's fuel consumption is for the purpose of producing electrical energy. By 1990 this proportion is expected to be 37% and to increase to 50% by the year 2000. If the electrical energy produced by nuclear power plants in 1978 had been supplied by oil fired stations, an additional 470 million barrels of oil would have been required, increasing our 1978 oil imports by about 12%. This would have increased our imbalance in foreign trade by over $5 billion. By 1985 the additional imports which would be needed to replace nuclear power are expected to almost triple. The economic penalty without nuclear power is a vital concern to our nation and must be evaluated along with the risks.

On May 12, 1979, the IEEE Energy Committee convened a meeting of members with professional backgrounds in the design, manufacture, construction, and operation of nuclear facilities. The purpose of this group was to identify safety and reliability issues which should be addressed. The issues identified and developed do not constitute a comprehensive view of the safety and reliability aspects of nuclear power, but they do summarize the views within their area of competence of a group of professional persons deeply involved in continuing the safe and reliable development of nuclear power.

INSTITUTIONAL PROBLEMS

The regulatory environment in which the United States nuclear power industry operates generates an adversary relationship between the regulated and the various regulatory agencies. These adversary relationships have occasionally inhibited the incorporation of safety designs recognized as having potential for improving public protection. Safety issues might be better served by a less adversarial role, possibly patterned after NASA. It does not automatically follow that technical cooperation to improve design compromises the integrity of the regulatory agency. The relationship between the regulatory bodies and the various components of the nuclear power industry is an economic, health, safety and reliability issue which should be addressed. We strongly recommend the identification of an office within the Nuclear Regulatory Commission in which issues concering the safe and reliable operation of Nuclear Power plants can be addressed in an atmosphere of cooperation between the government and industry, rather than under the adversarial relationship which currently exists.

THE REGULATOR'S ROLE IN OPERATIONAL MANAGEMENT

The relationship between the owner/operator of a nuclear power plant and the regulatory agencies is an issue which needs clarification. The

owner/operator's responsibility for, and authority to carry out the normal operations, maintenance, testing, staffing, training, and operational planning should not be abridged. The responsibility of the regulatory agencies in overseeing the operation and insuring compliance with the appropriate safety standards must be more clearly defined. Overlapping and conflicting regulatory review should be eliminated, as it leads to confused responsibility and inefficient operation, as well as unnecessarily diverting resources away from the most effective application of the "defense in depth" philosophy on which nuclear power plant safety is based. We urge that the current regulatory structure be reviewed in an effort to tailor its requirements to the most cost effective fulfillment of our nuclear safety needs.

THE REGULATOR'S ROLE IN INCIDENT MANAGEMENT

For this purpose, an incident is defined as a situation in which plant safety limits have been exceeded, or where the plant operator judges that the limits are likely to be exceeded, or where the maximum permissible release of radioactivity has been exceeded. Incident management must address four interrelated requirements: (1) Data gathering; (2) Decision making (3) Information dissemination; (4) Assuring implementation of decision.

Data Gathering requires that proper instrumentation exists and that it remains functioning during an incident to provide adequate information for decision making. The actions required to assure adequate data gathering include identification of the necessary data, procuring or developing the equipment required to collect this data and qualifying such equipment for accident environments and post-incident conditions. We strongly urge increased R&D funding by both the government and the private sector toward developing more reliable instrumentation to assure the proper evaluation of necessary data during the earliest stages of an incident.

Decision Making under emergency conditions requires that proper responsibility and authority for decisions be clearly recognized. This in turn requires that affected bodies (utility, NRC, public, etc.) are coordinated through good planning prior to the incident.

Each of the involved bodies (utilities, NRC, state and local officials, public information officers, etc.) must understand the decision areas for which they are responsible, and the manner in which they are to coordinate their action with the other involved bodies. We strongly recommend appropriate planning with the full participation of each of the responsible groups, with responsibility for determining the adequacy of this planning fully defined.

Information Dissemination requires that a central and adequate spokesman be utilized. The public as well as personnel involved in the incident must be kept informed. Different levels of information are required for different users, however, all information released must be as accurate and consistent as possible.

In incident situations the role of the NRC as direct technical advisor to state officials should be clarified. An approved emergency plan should serve as the basis for action by state and local officials. The NRC should advise in the continuation or modification of the plan.

The authority and responsibility of the NRC in the review and approval of strategy proposed by plant management during the course of the incident and until the plant is restored to normal operation or is in a cold shutdown condition is a major issue.

Assuring Implementation of Decisions is vital to incident management. Those groups or individuals making decisions must have the authority to assure that they are implemented. Since civil authorities have the power to implement evacuation, for instance, they must be included in the planned decision making process.

HUMAN FACTORS

The human is the vital link in the design, maintenance, and safe operation of a nuclear plant. To reduce the potential for incidents caused or worsened by human factors the adequacy of information systems available to the operator, together with the adequacy of operational procedures should be the subject of continuous review. The degree of plant automation needs to be reviewed to determine the best balance between automatic control and human decision-making. Attention should be focused on the adequacy of initial operator training and certification. Equipment in a power plant is continually modified, and operational procedures are continuously updated, and there is therefore a need for continuing operator retraining and requalification.

DESIGN CRITERIA AND DESIGN BASIS FOR SAFETY SYSTEMS

The major components of nuclear plants are themselves complex systems. The interactions between these components is a factor in the performance of safety systems. The adequacy and appropriateness of the design criteria and design basis for nuclear power plant safety systems, taking account of these interactions, is an issue which should be reexamined.

Many of the safety features of a nuclear power plant are designed to deal with the maximum credible accident. Accidents of much greater probability but with a much lower potential for endangering the public are not adequately dealt with, and could result in releases of radioactivity. We recommend Systems Engineering studies to identify scenarios which might present a hazzard to the public, including the combined effects of operator error and mechanical failure, which may be a better criteria and basis for safety design. The scenarios developed should identify the need for additional accurate, unambiguous and reliable instrumentation. They may also identify requirements for the more automatic processing and presentation of

timely information to guide operator actions. A part of the issue of the design basis and criteria for safety systems is also the qualification of safety related equipment.

PUBLIC INFORMATION

Misinformation or the lack of adequate information on the part of the public can lead to actions on the part of the regulatory agencies which may be counterproductive in terms of nuclear plant reliability and safety. The public needs help in understanding that all activity involves risks, and that the relative risks associated with nuclear power are acceptably low. The risks associated with restricted future energy supplies need to be made more clear. The facts associated with nuclear power need to be pointed out so as to put nuclear power radiation effects in the proper perspective.

The matter of public education is a nuclear power safety issue because a poorly informed public may force energy policy decisions which will be very detrimental to the environment, and to our way of life.

Two major points emerged from the panel's deliberations. Unambiguous authority and responsibility are primary considerations in the safe development and operation of nuclear power, and more expeditious ways of addressing safety issues than the present adversarial approach might result in still safer systems at lower cost, in both time and money.

The members of the panel have considerable depth in the areas which are discussed above, and we would be pleased with an opportunity to expand upon any of these issues if that should prove useful to you. I hope this material will prove useful in the Subcommittee's work.

NATIONAL SOCIETY OF PROFESSIONAL ENGINEERS

"Putting It All Together For The Engineer"

Address Reply To:
LEGISLATIVE AND GOVERNMENT AFFAIRS
OFFICE OF THE CHAIRMAN

May 22, 1979

Honorable Mike McCormack, Chairman
Subcommittee on Energy Research and Production
Committee on Science and Technology
B374 Rayburn House Office Building
Washington, D. C. 20515

Dear Chairman McCormack:

On behalf of the nearly 80,000 individual members of the National Society of Professional Engineers, I am pleased to present this testimony on the major issues of nuclear energy. NSPE is very interested in the continuation of a safe and dependable nuclear power system.

It may interest you to know that NSPE, in conjunction with approximately ten other national technical engineering societies, has formed a committee to review the work of and cooperate with the President's Commission on the Three Mile Island Accident. Engineers are in a unique position to lend valuable insight into the issues to be raised by this investigation. The new engineering committee would, if you desire, be pleased to meet with you or the Committee.

NSPE believes the questions current surrounding the nuclear industry can be solved if the Federal government presents an organized outline of steps to be taken to safely speed up licensing and permanently solves the waste disposal problems. Our technology is capable of answering the questions presented by nuclear energy.

Thank you for this opportunity to present our views. We would appreciate this statement being made a part of the official hearing record.

Very truly yours,

Otto A. Tennant

Otto A. Tennant, P.E.
Chairman

Enclosure

2029 K STREET N.W. ■ WASHINGTON, D.C. 20006 ■ 202/331-7020

STATEMENT OF THE

NATIONAL SOCIETY OF PROFESSIONAL ENGINEERS

ON THE

MAJOR ISSUES OF NUCLEAR ENERGY

TO THE

SUBCOMMITTEE ON ENERGY RESEARCH AND PRODUCTION

COMMITTEE ON SCIENCE AND TECHNOLOGY

U.S. HOUSE OF REPRESENTATIVES

May 22, 1979

The National Society of Professional Engineers welcomes this opportunity to comment on the major issues regarding nuclear energy. NSPE is a nonprofit organization representing nearly 80,000 individual members from virtually every discipline of the engineering profession. Many of these members are intimately involved with the technical aspects of nuclear energy generation and have been involved since the advent of nuclear energy several decades ago. They are, therefore, uniquely qualified to provide the technical expertise necessary for the safe and effective production of nuclear energy.

The recent Three Mile Island accident has raised suspicions throughout the country about the future of nuclear energy as a major energy source. NSPE believes that an effort must be made to reassure the public of the safety of nuclear power generation. In conjunction with other technical engineering societies, NSPE has formed a committee to provide technical assistance and review the findings of the President's Three Mile Island Accident Commission. We hope that the Commission will fairly evaluate nuclear technology and put forth workable solutions which can be easily adapted by the Federal government and the nuclear industry. NSPE is concerned about the present haphazard system of licensing and siting permits which is causing delays in nuclear power plant construction. We urge Congress to carefully review these procedures and eliminate those policies which do not enhance the safety and reliability of power plants but merely add unnecessary time and costs to the process.

NSPE emphasizes that extensive technology has already been developed to safely and reliably treat nuclear wastes. All that remains is for the Federal government to make the political decision to proceed expeditiously with the demonstration and implementation of the existing technology of nuclear waste management. The Federal government's responsibility is clear since the bulk of existing wastes and by-products is from Federal military/defense programs. Indeed, without considering commercial reactor fuel, many millions of gallons of liquid fuel and solidified military nuclear waste already exists. The Federal government should immediately select one or more of the existing developed processes and proceed with the disposal of its military/defense

wastes. This could be accomplished by a pilot plant scale demonstration of the solidification and disposal of high-level power reactor wastes.

Economically, the cost of establishing and operating an effective radioactive waste management system is substantial in terms of today's dollars, but that cost is small in terms of its enormous and essential contribution to our Nation's goals of energy independence.

NSPE believes it essential that America lessen its dependence upon foreign energy sources, specifically oil and natural gas. This can be accomplished by developing and utilizing technologies which better utilize our domestic energy resources. For the short range, we must make better use of more abundant resources, such as nuclear energy, by building more nuclear power plants. To do this we must accelerate the licensing of new facilities and establish a Federal policy for the treatment and disposal of nuclear waste.

NSPE wishes to assure the Subcommittee of our continued interest in the subject and of our willingness to be of service to the Subcommittee in whatever way possible. We appreciate this opportunity to express our views.

NUCLEAR POWERPLANT SAFETY SYSTEMS

WEDNESDAY, MAY 23, 1979

HOUSE OF REPRESENTATIVES,
SUBCOMMITTEE ON ENERGY RESEARCH AND PRODUCTION,
COMMITTEE ON SCIENCE AND TECHNOLOGY,
Washington, D.C.

The subcommittee met, pursuant to notice at 9:30 a.m., in room 2318, Rayburn House Office Building, Hon. Mike McCormack (chairman of the subcommittee) presiding.

Mr. MCCORMACK. The meeting will come to order, please.

Good morning, ladies and gentlemen.

Today the Subcommittee on Energy Research and Production continues its hearings on the topic of nuclear powerplant safety. This is the second of a series of three hearings.

Yesterday we discussed the present philosophy and technology of nuclear powerplant safety systems. During that hearing we heard from representatives of a reactor manufacturer; a nuclear powerplant construction company; from the Electric Power Research Institute, which represents the private utilities; from the Environmental Coalition on Nuclear Power; from the Nuclear Regulatory Commission; and from Dr. Harold Lewis of the University of California, who among other things was chairman of the panel which reviewed the Rasmussen report.

This hearing was informative and provided sound guidance to the subcommittee on various approaches to nuclear energy.

The witnesses clearly agreed that a significant amount of additional research and development on nuclear powerplant safety is needed, although the nature and priority of specific tasks remains a matter of opinion.

This morning, the theme of our hearing is the Three Mile Island accident, what happened, what are the technological implications. We will address industry, utility, regulatory, and State government perceptions of the accident, with special emphasis on system failures and the extent to which human error played a role in the accident.

Our witnesses are Mr. John MacMillan, vice president, Nuclear Power Research Division, Babcock and Wilcox Co., the manufacturer, the vendor of the nuclear powerplant at Three Mile Island; Mr. Herman Dieckamp, president, General Public Utilities Corp., the operator of the utility; Mr. Harold Denton, Director of the Office of Nuclear Regulation, who assumed management and control for the Federal Government at the Three Mile Island site; the Honorable William W. Scranton III, Lieutenant Governor of the Commonwealth of Pennsylvania; and Mr. John Conway, President of the American Nuclear Energy Council.

The subcommittee is, of course, pleased to have these distinguished witnesses with us today and we are looking forward to their testimony.

It is important to understand that this hearing is not a witch hunt. We are not looking for scapegoats but rather for truth and understanding. Our purpose is not to sensationalize or to generate fear or hysteria.

The Three Mile Island accident was a serious accident. It raises important questions related to equipment reliability, plant design, training and qualification of operators, and our responsibility on this committee for initiating legislative action to be sure that we benefit from the lessons learned and assure that all existing and future nuclear plants will be even safer than they already are, and that the chance of any similar accident in the future is reduced to an absolute minimum.

Before hearing from the scheduled witnesses, we will have a demonstration of a model of a reactor system. This is brought to us by the University of Florida, Professor Schoessow, who is a friend of the chairman of the full committee, the Honorable Don Fuqua.

I would like to ask Congressman Fuqua if he would introduce Professor Schoessow and the presentation at this time. This will provide background information before we start our testimony.

Mr. FUQUA. Thank you, Mr. Chairman.

Long before we ever dreamed that Three Mile Island would happen, I had an opportunity to visit the nuclear engineering school at the University of Florida, where Professor Schoessow demonstrated this model.

I commented at that time that I thought it was very illustrative of what really happens inside of a nuclear reactor. For the lay person it provides a better understanding of the operation and I hoped that we would have an opportunity for him to bring it up to Washington and we would have a chance to look at it.

It is here now. I think it does a very excellent job of demonstrating, particularly to the lay person, just how it operates. Many had a chance to see it yesterday, and I am very happy at this time to present Dr. Glen Schoessow with his model and his student assistants.

Mr. MCCORMACK. Doctor, would you like us to come over there? Would you like to address us first?

STATEMENT OF GLEN J. SCHOESSOW, PROFESSOR OF NUCLEAR ENGINEERING, UNIVERSITY OF FLORIDA, ACCOMPANIED BY DR. JOHN G. STAMPELOS AND FRED DAMEROW

Dr. SCHOESSOW. I would prefer, sir, that the committee come down here to get a good look.

Mr. Chairman, ladies and gentlemen, we are very glad to be here. We come with our model and our hardware to put on a demonstration which we hope will be helpful. We have a time frame of 15 minutes, which is not very much, but we are going to stay inside of it.

This means that we will not deal in lengthy or detailed explanations. So it is likely that especially for the experts in the crowd—and there are many, I am sure—we might not cover the system in the detail they would like. You have to bear with us on that.

In making this working model, which we call a see-through reactor simulator, because you can see through the system and see what happens, we wanted first of all to be able to show our students and others what the core of a reactor would look like if we had windows in the big power reactor, so we could look in the core when it is operating at full power.

In this demonstration, as it is set up now, the reactor is at full power. The core, which we refer to here, is seven of these immersion heaters, a kilowatt each, powered by that extension cord.

There is no uranium. We tried to make this core representative of a part of a regular fuel assembly, which we brought along so you could see it. We just took that piece on the side—we took a little piece out of that and put it in here, and we power it with electricity, and we make it so we can see through it.

Then we have to have the other systems. We have a system which starts with the core, you can see through it. The center one has thermocouple connections on it which are used to measure temperature. We have many other temperature devices which normally go to a data panel, which we didn't bring.

We have just taken the hottest spot on the center fuel tube and put it on this recorder so you can see what happens.

So having this much, then we need a cooling system. The water comes in, the water gets hot, it goes back here to a heat exchanger and is cooled because we are putting 7 kilowatts in here, and that is quite a lot of heat.

Then the water is recirculated by some pumps back there. Then it comes back though a control panel system which has built into it the steady state flow line, with which we are now operating.

We can operate, hopefully if nothing happens, for hours this way, while we are studying the phenomenon going on.

The unique feature is that we are using distilled water, going past fuel assemblies, that represent the real fuel assembly, and we can see what is happening.

This is not a computer type simulator. You can see what happens. The water does its own thing that nature demands it do, when it tries to cool the fuel assemblies. So the readout we get is what happens, not what we might have programmed into a calculator or an electronic type computer. That is one of the main differences.

In addition to the steady flow line, we have what are called the emergency core cooling systems in a large nuclear power plant. In addition to the main circulating pumps, and the main cooling system, which is this system here [referring to the picture-on the-easel] that takes water, puts it into the core, to a steam generator, makes steam, steam goes to the turbine, then to the electric generator, the water is recirculated by this pump, and this circuit here just delivers hot water to a steam generator to make steam to run the turbine.

We don't have a turbine, so we just cool the water with our heat exchanger.

In the boiling water reactor [referring to picture on easel] there is no steam generator. The steam is made right in the core, goes off the top of the reactor, and goes to the turbine and drives the generator, and then it is recirculated back to the reactor.

Mr. McCormack. Would it be proper to point out that the outer sleeve there is just for your demonstration, to keep the system cool?

Dr. Schoessow. Yes, sir, it would. If we remove this containment for a moment—seeing we are not going to have any accident—we have two parts to this reactor core, this outside piece is a piece of plastic, and the inside piece is pyrex glass. The inside piece contains the hot fuel tubes.

If we let the core dry out, go all the way down, no water in, those fuel tubes get hot, so we have to be able to cool this inside glass or it would break on us. So the outside jacket of water here is just a cooling device for the inside piece.

Mr. McCormack. It is only for that demonstration that you have the outside core. That has nothing to do with the reactor or any portrayal of the reactor?

Dr. Schoessow. That is correct.

Now, we should discuss the emergency core cooling systems and controls. In addition to having the manual controls, we have a control panel which is just a timing unit. In the large powerplants you have three sets of emergency cooling systems.

You have an accumulator, which is a big tank full of water—two of them—inside the containment, half full of high pressure nitrogen, half full of water, just sitting on the line that is putting the coolant normally through the reactor.

So if you have a small pipe break in the primary loop, we call it, the reactor loop, you would have accumulators to put water in because the problem is we want to keep the core covered. If we save the fuel tube we save basically everything.

The second system is the high pressure injection system, which is a series of pumps that takes the water from outside and puts it into the reactor to cool the reactor.

The third system is a low-pressure injection system. So there are backup systems, three of them, to provide cooling for the reactor if something happens, like a small pipe breaks, or a safety valve sticks open, or a crack in a large pipe or break in pipe from pressurizer to reactor or multiple failure of steam generator tubes or—some similar sort of thing that is not supposed to happen, which lets water out of the core.

We then have three systems, and each of them are in duplicate. They are redundant systems, so actually we have six systems. For a very small pipe break, any one of them would do the job; that is, keep the core covered with water. For a very large pipe break, all six of them would probably be needed.

Now, why do we say so much about the fuel tube and the fuel assembly? This is a one-third size fuel assembly; that is a zirconium tube, zircaloy tube. It looks like this sample tube when it is new, nice and shiny and bright. It is very good material, which we will demonstrate to you.

It is oxidized here [in the fuel assembly] a little, like you blue a gun barrel, so it doesn't show scratches, and also protects it a little bit and makes it prettier.

There is no uranium in this fuel assembly. If there was, it would be inside of these tubes, hermetically sealed by welding, with some helium inside to prevent oxidation.

If we can keep this fuel tube, we call it—it is called fuel rod, fuel pins, fuel tubes—it is a tube, fuel tube. If at any time during the malfunction of any system in the reactors we can keep the fuel tube temperature down, then everything has to stay inside the fuel tube, the fission products, the fission gases, and they cannot even get out into the containment, much less ever get to the public.

So our emphasis is on protecting this fuel tube, keeping its temperature down. That is what we are going to try to show you this morning.

In our first look here now, we have the reactor running just at normal full power for a pressurized water reactor (PWR), which means very little boiling in the core, the picture on the left. Mr. Damerow will change the amount of water that is coming up to the center two-inch tube, cut it by a factor of two.

Now, then, the fuel rods still have the same heat. So we form a lot of steam right in the core. That is the boiling water reactor (BWR). Now you have a boiling water reactor. The steam is being formed in the core, going up to the top, and then would go to the turbine.

Now you are looking inside of a big boiling water reactor.

Now we can cut that back to normal PWR mode. Now the fuel temperature here for the normal run, for the boiling water reactor, you see this didn't change, go up or down, it is sitting right at the normal fuel tube temperature, same as for the BWR, which we are operating between 600° and 700° F.

It is not so hot that you can see it glow. It is black to the eye, basically.

Now, Mr. Damerow will set the system so that we are going to break a small pipe. This is the core drain on the bottom. When he sets the system, and flips this loss of coolant accident switch this valve will open and the water will drain out of the core and the fuel tubes; it will be on its way to becoming uncovered. That would be very bad; but the emergency core cooling systems here will come on, hopefully, since it has had a long ride from Gainsville, a lot of bumps.

Hopefully it will come on just like it should, and the core will not uncover. You will see this fuel temperature will not change.

Now, we need a volunteer. Chairman McCormack, just flip that switch, sir, and you will be a little more famous than you are, if that is possible.

Now you can see the core, the water is coming down in the core. The reactor has scrammed. When a reactor scrams from being up to full power, the remaining power for some period of time is 10 percent of what it was running at.

So you must take out that heat or the fuel will just keep on heating up the fuel tube. Now the water level is dropping, and we are getting just a little bit worried that maybe the system won't come on and stop that water level drop before it gets down below the top of the fuel.

This was a small pipe break. A small pipe break could be many different things. I could give you a list of them, but let's just say it is a small pipe break, maybe that big, [indicating about an 6-inch diameter circle with hands] which would be a pretty serious thing if you didn't have something to put water in. The high pressure

injection system came on automatically; the water level in the core is rising, the fuel tubes were not uncovered.

We are back in a very safe condition. We did nothing manually because this would happen by itself automatically in a reactor plant. You can see the fuel temperature did not rise. It actually went down a little bit because the high pressure injection system takes colder water from outside and puts it in rather than the hot water that has been circulating.

Now, Mr. Damerow will reset it back to just where it was before this loss of coolant accident. We will run through it once more. This time we need another volunteer to flip the switch.

Where is Mr. Denton?

Mr. Denton, you know all about accidents. You know how to cure them, how to fix them.

Mr. DENTON. I really don't want to start one. [Laughter.]

Dr. SCHOESSOW. When I heard the name Mr. Denton, all I could think of, sir, was the Dentons my three children wore in the crib. So I would never forget Mr. Denton.

Now, if you will flip this LOCA switch down, we will repeat the last——

Mr. DENTON. I am really not trained or qualified.

Dr. SCHOESSOW. We will take a chance on you, sir.

Now, he has broken the pipe. He is letting the water drain out. Don't be confused by this outside jacket cooling water. It is the water inside the inside tube around the fuel tubes which you can see is going down.

Now Mr. Damerow is going to change the controls, manually, he is going to interrupt the automatic systems and the core is going to uncover. This means the water is going down below the top of the fuel, it is boiling dry, as you can see.

This we call an uncovered core. Now the fuel has no water to cool it. It has no choice, except to rise in temperature. You can see on this chart now the very rapid rise in temperature of that center fuel tube. It will keep going on up until Mr. Damerow reactivates the high pressure injection system to reflood the core and reduce the fuel tube temperature.

The system was not on automatic emergency core system. Mr. Damerow interfered with that. So the core was uncovered and the fuel tube temperature rose rapidly. It has no choice. It will go up to 2,000° F, after a scram reactor with all the water out.

If you leave the core in this uncovered condition for any length of time, like an hour, then it would go up to 3,000° F. Over an hour it will go up to maybe 3,500°. Very big numbers.

So we must not let that happen. That is the reason we have the emergency core cooling systems working automatically with redundancy and backup, so it will behave like you saw the first demonstration.

We will demonstrate the effects of high temperature on the fuel tube.

We will leave this, and go over to the furnace. We have about 3 minutes left. We will show you what you would see if you could look in a reactor, in which the water is drained out, after it has been operating at full power and scrammed.

The core would be up to to 2,000° F. There is no question about that number. Any nuclear engineer worth his salt and a lot of others can make that number. It is just the average temperature of all the fuel in the core and the fuel tubes.

This is a 2,000° core. [Opens furnace door.] That is what you would see. We didn't let our core go up that high because we didn't want to ruin our tubes, our heaters, for each demonstration. But this is what you would see, the 2,000 for a short period after a scram from full power.

Now, what is the significance of this as far as this tube is concerned, in which we are trying to keep not only the fuel but all the fission gases?

This fuel tube is zirconium, a zircaloy, a very wonderful material. We have some specimens in here. We will take one out of the furnace, that was new and shiny just like this before we put it in there, about 3 minutes ago.

We will take one of these out. We will drop it in the water. In the furnace it is 2,000° probably 1,900° F. by the time I got it to the water. We will take it out of the water, cool it off a little bit more, to make sure we can get out hands on it.

Now, what do we have? The center section of this didn't cool as fast as the ends. The center section doesn't look a lot different than this, [pointing to the fuel assembly] but the end sections here which cool the fastest has some white on it.

This white, is from the zirconium reacting with the oxygen from the water, making the zirconium dioxide. That frees the hydrogen from the water molecule. The hydrogen gas then is free, and being the very lightest gas we know of, will go to the highest elevation in the reactor, which will be the top part.

Now, this is for one quench. It still looks pretty good. But let me show you here—I need a volunteer, someone that is good with a hammer, not me. Here is a piece of tube. She will hammer on the end of that. That is a new piece of tube. Hit it. More. More. It is very ductile. It can bend, flatten, take a lot of punishment. It is still in one piece, which shows you that it is very good material.

Now, we will take this piece here, that has been in the furnace once. John, will you come up and give this a whack. You hit this with a hammer to see if it will behave the same. You see, it does not, it is brittle. It might look the same, but it has been through phase changes, between 1,200° and 1,800° F, and now it is brittle.

It is still a pretty good tube sitting there, but it is brittle so you cannot use it again. You have to take it out of the reactor and replace it. That is once it has been up to 2,000°.

If the core is uncovered for an hour or more, the temperature of the fuel tube will go up to 3,000°. So we will take one out of the furnace that has been up to 2,000° once, and this is the second time for it, which would be about the equivalent of going up to 3,000 once.

We will take it out of here. It is already a little bit damaged. We will drop it in the water, quench it, cool it off a little bit.

Now It is all white. A lot of zirconium dioxide powder. It is like an egg shell. If we take this and hammer on it—there—that is what I have left, only powder. So if the fuel tube is allowed to go up to high temperatures, like 2,000°, which it will, if the emergency

cooling systems are not allowed to do their thing, we would have problems. If it goes up higher, because the core stays uncovered a longer time, we have more serious problems.

Ladies and gentlemen, in closing I would just say this. Emergency core cooling systems, properly built, always on a ready status, with the proper redundancy, and allowed to operate through the cycle, should keep that fuel temperature down to near normal for this accident or any accident like this that could happen.

I thank you very much, ladies and gentlemen, for your kind attention. It has been a pleasure to be here.

Mr. MCCORMACK. Thank you, Professor.

I want to thank you for bringing your demonstration here and sharing it with us. I am sure it has helped us understand better. The Professor has also provided us with some samples of quenched zirconium for the members to examine.

Before we proceed further, without objection, I would like to insert into the record a statement provided by Dr. Schoessow to Congressman Fuqua, concerning improvement of engineering safeguard facilities in nuclear power plants.

[Material referred to follows:]

DON FUQUA, FLA., CHAIRMAN
ROBERT A. ROE, N.J.
MIKE MC CORMACK, WASH.
GEORGE E. BROWN, JR., CALIF.
JAMES H. SCHEUER, N.Y.
RICHARD L. OTTINGER, N.Y.
TOM HARKIN, IOWA
JIM LLOYD, CALIF.
JEROME A. AMBRO, N.Y.
MARILYN LLOYD BOUQUARD, TENN.
JAMES J. BLANCHARD, MICH.
DOUG WALGREN, PA.
RONNIE G. FLIPPO, ALA.
DAN GLICKMAN, KANS.
ALBERT GORE, JR., TENN.
WES WATKINS, OKLA.
ROBERT A. YOUNG, MO.
RICHARD C. WHITE, TEX.
HAROLD L. VOLKMER, MO.
DONALD J. PEASE, OHIO
HOWARD WOLPE, MICH.
NICHOLAS MAVROULES, MASS.
BILL NELSON, FLA.
BERYL ANTHONY, JR., ARK.
STANLEY N. LUNDINE, N.Y.
ALLEN E. ERTEL, PA.
KENT HANCE, TEX.
JOHN W. WYDLER, N.Y.
LARRY WINN, JR., KANS.
BARRY M. GOLDWATER, JR., CALIF.
HAMILTON FISH, JR., N.Y.
MANUEL LUJAN, JR., N. MEX.
HAROLD C. HOLLENBECK, N.J.
ROBERT K. DORNAN, CALIF.
ROBERT S. WALKER, PA.
EDWIN B. FORSYTHE, N.J.
KEN KRAMER, COLO.
WILLIAM CARNEY, N.Y.
ROBERT W. DAVIS, MICH.
TOBY ROTH, WIS.
DONALD LAWRENCE RITTER, PA.

COMMITTEE ON SCIENCE AND TECHNOLOGY
U.S. HOUSE OF REPRESENTATIVES
SUITE 2321 RAYBURN HOUSE OFFICE BUILDING
WASHINGTON, D.C. 20515

HAROLD A. GOULD
EXECUTIVE DIRECTOR
PHILIP B. YEAGER
REGINA A. DAVIS
JAMES E. WILSON
WILLIAM O. WELLS, JR.
RALPH H. READ
JERRY SYMON
JAMES W. SPENSLEY
STEPHEN LANES
DAN W. MARCEAU
MINORITY STAFF DIRECTOR
PAUL A. VANDER MYDE

May 3, 1979

Professor G. J. Schoessow
300 N.W. 34th Terrace
Gainesville, Florida 32601

Dear Professor Schoessow:

Thank you for your telegram of April 3, 1979 concerning the accident at the Three Mile Island Reactor No. 2.

Subsequent to your telephone conversation with Mr. Williams of the Committee staff, an effort was made to obtain permission for you to conduct a separate investigation of the accident by contacting the Nuclear Regulatory Commission and Metropolitan Edison. Both organizations appreciate your interest and support, but have requested that you wait until the current investigations have been completed. At that time, I will again attempt to arrange for you to visit Reactor No. 2 so that you can obtain the information necessary to simulate the accident in the "see-through" model at the University.

As you know, the cause of the accident and particularly the management of the events which followed, have become somewhat controversial. There is obviously much work to be done if nuclear energy is to make a significant contribution to our energy future. The Committee will be conducting hearings on reactor safety at the end of May and it would be useful to us if you would submit a paper on the subjects of systems redundancy, control systems, or on any subject you feel would be pertinent. In particular, it would be most helpful if you could submit suggestions for improving reactor design. Whatever information you choose to send will be inserted as part of the official hearing records.

The reactor safety hearings will begin May 22 and continue through May 24. I would be pleased if you could arrange the time to attend these hearings as I am sure you would find them most interesting.

Again, thank you for contacting me and I look forward to hearing from you regarding your submissions for the hearing records.

Sincerely,

DON FUQUA
Chairman

DF:Wgm

Reply due by 4/6

If it is not possible to prepare a final reply by the date shown above, an interim reply will be prepared by the above date indicating when a final reply may be expected. Please return copy of incoming letter with proposed response.

Telegram

FL 111 04-03 0917A ESTPOMA
T DLY BY MGM

Telegram
Date of ltr: 4/3
Date rec'd. in Comm. 4/3
From: G. J. Schoessow - Tallahassee - has reactor model & wants to visit Washington

THIS IS FROM THE PROFESSOR AT GAINESVILLE FLORIDA WITH THE SEE THROUGH REACTOR MODEL. WE ARE TRYING TO MAKE OUR SEE THROUGH MODEL MALFUNCTION TO REPRESENT THE THREE MILE PLANT. WOULD BE VERY HELPFUL IF YOU WOULD ARRANGE WITH NRC SO I COULD HAVE ACCESS TO THE BRIEFINGS AT THE SITE AND IN THE CONTROL ROOM TO OBTAIN FIRST HAND DETAILS TO WORK WITH. PLEASE ADVISE IF YOU WILL ARRANGE FOR THIS ACCESS TO BRIEFINGS AND CONTROL ROOM. I WAS A SENIOR REACTOR OPERATOR FOR MANY YEARS SO I DO UNDERSTAND THE PROBLEMS.
I WILL PAY MY EXPENSES AND BE RESPONSIBLE FOR MY SAFETY AND WILL HOLD ALL OTHERS HARMLESS.
RESPECTFULLY,
G J SCHOESSOW 300 NW 34 TERRACE GAINESVILLE FL 32601 (904)372-3995

09:17 EST

MGMCOMP MGM

(904)-392-1422
Business

Nuc Science
U. of F

RECEIVED
APR 3 1979
COMMITTEE ON SCIENCE AND TECHNOLOGY

APR 3

COLLEGE
OF
ENGINEERING

DEPARTMENT OF NUCLEAR ENGINEERING SCIENCES

REPLY TO
UNIVERSITY OF FLORIDA
DEPARTMENT OF NUCLEAR ENGINEERING SCIENCES
202 NUCLEAR SCIENCES CENTER
GAINESVILLE, FLORIDA 32611
AREA CODE 904 PHONE 392-1401

May 17, 1979

Honorable Don Fuqua
Committee on Sciences and Technology
U.S. House of Representatives
Rayburn House Office Building
Washington, D. C. 20575

Dear Mr. Fuqua:

In response to your letter of May 3, 1979, I am pleased to offer my recommendations as to the direction we should take to improve the engineered safeguards facilities for nuclear power plants.

When it comes to "safety" of nuclear power plants, the number one requirement is safety of the population, and the number two requirement is safety of the plant itself. Not only is this is required by present regulations, but is the practice that has been followed by the nuclear industry from its beginnings.

Title 10, Part 50 of the Code of Federal Regulations specifies conditions the engineered safeguards facilities must meet during the postulated maximum credible accident, that is the "large pipe break" in the primary system. The containment vessel must contain all radioactivity to protect the population and the Emergency Core Cooling System (ECCS) must be capable of keeping the maximum fuel-tube temperature below 2200°F. The ECCS is designed to meet this specification. Other limits are: oxidation of fuel-tube not to exceed 17% of thickness and hydrogen production not to exceed 1% of the amount that oxidation of all the fuel-tube could produce.

The adequacy of the containment vessel to contain the radioactivity even with some controversial interference by the operators has been demonstrated by the recent Three Mile Island (TMI) accident.

The hard fact is that any accident that leads to a partially uncovered core shortly after shutdown from full power operation may cause severe oxidation and mechanical damage to the fuel-tubes releasing fission products into the primary coolant. Fission products in the primary loop can escape into the containment building as at TMI resulting in a costly clean-up and repair situation.

We must analyze every existing nuclear power plant to determine its vulnerability to such costly clean-up and repair that can arise from credible scenarios less than the "large pipe break," similar to the TMI

situation. I believe this can be done with an acceptable cost increase in any new plants that may be found to have inadequate protection and at higher costs in any existing plants requiring retro-fitting. Additional briefing and training of operators and limiting their options during emergencies is also in order. A remote controlled vent line from the top of the reactor vessel, a direct reactor core water level indicator, among other minor changes, should also be considered. The ongoing loss-of-flow-test (LOFT) program should be of considerable value in providing data on which to base decisions.

I have been in the nuclear business from its beginnings. I am not committed pro or con to nuclear energy; in my view nuclear energy always has had to, and must continue to, prove that it can be utilized safely and it must, of course, be economical.

With the above accomplished so that after any failure, recovery efforts and costs will be minimized, the reactor owners and the public will have reason for renewed confidence in nuclear energy as a part of our national energy selfsufficiency strategy.

I appreciate this opportunity and hope the above will be helpful. If I can be of assistance in any way, please feel free to call on me.

Respectfully submitted,

Glen J. Schoessow
Professor of Nuclear Engineering

Mr. McCORMACK. At this time I should like to invite the ranking minority member of the committee, John Wydler, to make an opening statement.

STATEMENT OF HON. JOHN W. WYDLER, A U.S. REPRESENTATIVE FROM THE STATE OF NEW YORK

Mr. WYDLER. Mr. Chairman, a lot has been written and said about the March 28 nuclear accident at Three Mile Island. Maybe people are getting tired of this subject because they read about it on such a constant basis.

You wonder sometimes what new light is being shed on the whole situation. Yet, Mr. Chairman, little or no attention has been paid to what we can learn from such an accident.

I believe that careful analysis of the details of the Three Mile Island accident, in terms of systems failures and human errors, can be a constructive basis for a significant enhancement of nuclear safety systems and procedures.

I intend to make every effort to see that this incident becomes for nuclear power what the Apollo spacecraft fire was for the national space program.

As many of my colleagues will recall, the Apollo fire was a tragic incident which took the lives of three outstanding astronauts. However, the National Aeronautics and Space Administration, in team with its industrial contractors, revamped their Apollo systems and upgraded their safety standards in terms of new materials, more stringent operating procedures and additional measures aimed at minimizing human error. This contributed greatly to the program's successes in the years that followed.

The nuclear community is faced with a similar situation today as NASA was 12 years ago. However, at Three Mile Island no fatalities resulted from the nuclear accident and exposure of the citizenry amounted to radiation levels comparable to several chest X-rays.

NASA had to enhance the quality of safety in the face of tragedy, and yet I feel the urgency to address the nuclear safety problem is just as great even though there has been no catastrophe.

Mr. Chairman, I think it is generally agreed in the technological community that two major conclusions have been reached so far on Three Mile Island.

The nuclear reactor safety systems were tested under conditions so extreme that a saboteur could not have done a better job of stressing the reactor. Probably the demonstration we just saw makes that clearer yet.

Yet the system behaved better than anyone had the right to expect. I cannot make the same observation about the operators performance. Human error combined with the absence of reliable and confirmatory instrumentation obviously played a major role in escalating a normal shutdown sequence into a potentially harmful incident.

This has to be avoided in the future. I hope our committee's deliberations are the first step in a meaningful congressional initiative to enhance reactor safety by technological improvements, not by adding another layer of regulatory complexity.

Thank you, Mr. Chairman.

Mr. McCORMACK. Thank you, Mr. Wydler, for an excellent statement. I very much appreciate the most constructive attitudes reflected in that statement.

Our first witness today is Mr. John MacMillan, vice president, Nuclear Power Generation Division, Babcock & Wilcox Co.

Mr. MacMillan, please come up and make yourself comfortable at the witness table. Your statement, without objection, will be inserted into the record at this point, along with any supplemental material you may wish to submit.

You may proceed with your testimony as you wish. You may wish to introduce Mr. Roy.

STATEMENT OF JOHN MacMILLAN, VICE PRESIDENT, NUCLEAR POWER GENERATION DIVISION, BABCOCK & WILCOX CO., ACCOMPANIED BY DONALD ROY, MANAGER, ENGINEERING, NUCLEAR POWER GENERATION DIVISION

Mr. MACMILLAN. Yes, Mr. Chairman. Thank you very much. I have with me today Dr. Donald Roy, who is the manager of engineering for the Nuclear Power Generation Division of Babcock & Wilcox.

In response to your letter of May 11, I am prepared this morning to discuss the manufacturer's perspective on the events that took place at Three Mile Island, as an introduction this morning.

Second, to try to identify what we consider to be significant factors in that sequence of events. You also requested some information on the characteristics of the B. & W. design, unique characteristics, specifically the once-through steam generator. I am prepared to discuss that.

Finally, some very brief comments relative to the specific improvements in technology which might be indicated as a result of the Three Mile Island experience.

I have submitted a full statement. I appreciate that it will be incorporated in the record of these proceedings.

[The prepared statement of Mr. MacMillan follows:]

STATEMENT OF

THE BABCOCK & WILCOX COMPANY

The Babcock & Wilcox Company is pleased to submit its statement before the Subcommittee on Energy Research and Production of the House Committee on Science and Technology. This statement is submitted in conjunction with an invitation by the Subcommittee to Babcock & Wilcox to appear before the Subcommittee on Wednesday, May 23, 1979. At the Subcommittee hearing Babcock & Wilcox will be presenting a synopsis of this statement.

This statement will address first, how a nuclear plant comes into existence beginning with its inception as a planned addition to a utility's generating capacity including participants and their roles; second, to briefly discuss a pressurized water reactor nuclear steam system; third, the sequence of events and the significant factors involved in the incident; fourth, the once-through steam generator and its characteristics; and fifth, the generic technological implications of Three Mile Island.

It is appropriate to begin this statement by briefly describing the genesis of a nuclear power plant and the particular roles each of the participants plays.

Following a utility's decision that it wants to add a nuclear power generating station to its electricity producing facilities, it will generally employ an engineering firm to begin the process of bringing that decision into reality. Several decisions such as

location, desired date of commercial operation, generating capacity, and financial considerations are made. Generally, the engineering firm will prepare bid specifications for the various components of the plant. Because of the design and manufacturing lead times required for the nuclear steam system, often these specifications are released to bidders in the early stages of the project. Suppliers, including B&W, review the specifications and prepare proposals for submittal to the customers and their engineering firms. Following what is usually a lengthy evaluation and negotiation period, an award is made and the supplier and the engineer begin to proceed with detailed design, licensing and procurement efforts to support the customer's schedule.

Each individual customer-supplier relationship is governed by the respective contract requirements and the requirements imposed by the NRC. The supplier's responsibility to the utility is to furnish equipment and services in accordance with these requirements. Specifically, the supplier has the responsibility for the design of the equipment which it supplies and the responsibility to provide interface design information and criteria to allow the engineer to integrate this equipment into the design of the complete plant. The supplier's scope of supply usually includes the complete reactor coolant system, components within major auxiliary support systems and emergency core cooling systems, instrumentation and control systems and other equipment such as fuel handling equipment.

Generally that part of the plant which is outside the scope of supply of the nuclear steam system supplier is referred to as the "balance of plant". The engineer is responsible for the design and procurement of equipment for the "balance of plant". The nuclear steam system supplier and engineer work together to integrate their respective scopes of supply at the interface through the transmittal, review and application of interface information and criteria in the form of drawings, specifications, system descriptions and instruction. For instance, the nuclear steam system supplier provides the reactor coolant system which is located in the containment. The containment is designed by the engineer. The integration of the reactor coolant system into the containment design is an example of the interplay between the supplier and the engineer.

Another key participant in the genesis of a nuclear power plant is the Nuclear Regulatory Commission. The NRC's role includes the responsibility for the review of the plant design and the issuance of the appropriate permits. During the early stages of the project the NRC, in accordance with the provisions of the Atomic Energy Act, must issue a Construction Permit based on their acceptance of the design at that time. This permit is necessary before any significant plant construction activity may take place. The NRC must also review the final design of the plant and issue an Operating License before

the utility may load fuel into the reactor. This also is required by the Atomic Energy Act. In addition, the NRC is responsible for establishing operator training requirements and for testing and licensing of operators. Once a plant has started operating, the NRC maintains a surveillance function, monitoring plant operation to insure compliance with existing plant technical specifications.

A particular engineer or customer may impose their specific criteria on a supplier which may vary from those imposed by another engineer or customer even though the basic nuclear steam system would be categorized as the same type. Additionally, varying criteria may be imposed by the "balance of plant" design or by the equipment selected for the "balance of plant". Therefore, even though plants supplied by a particular nuclear steam system supplier may be thought of as being the same, in the specifics of the design they are usually different.

It is additionally appropriate to describe the Babcock & Wilcox pressurized water reactor in simplified terms with reference to Figures 1 and 2 in order that one can have a basic understanding of the production of electricity through the use of nuclear power.

A pressurized water reactor nuclear plant is essentially made up of three separate and distinct loops. For definition purposes we will call these loops the primary loop, the secondary loop, and the condenser/cooling loop (Figure 1)

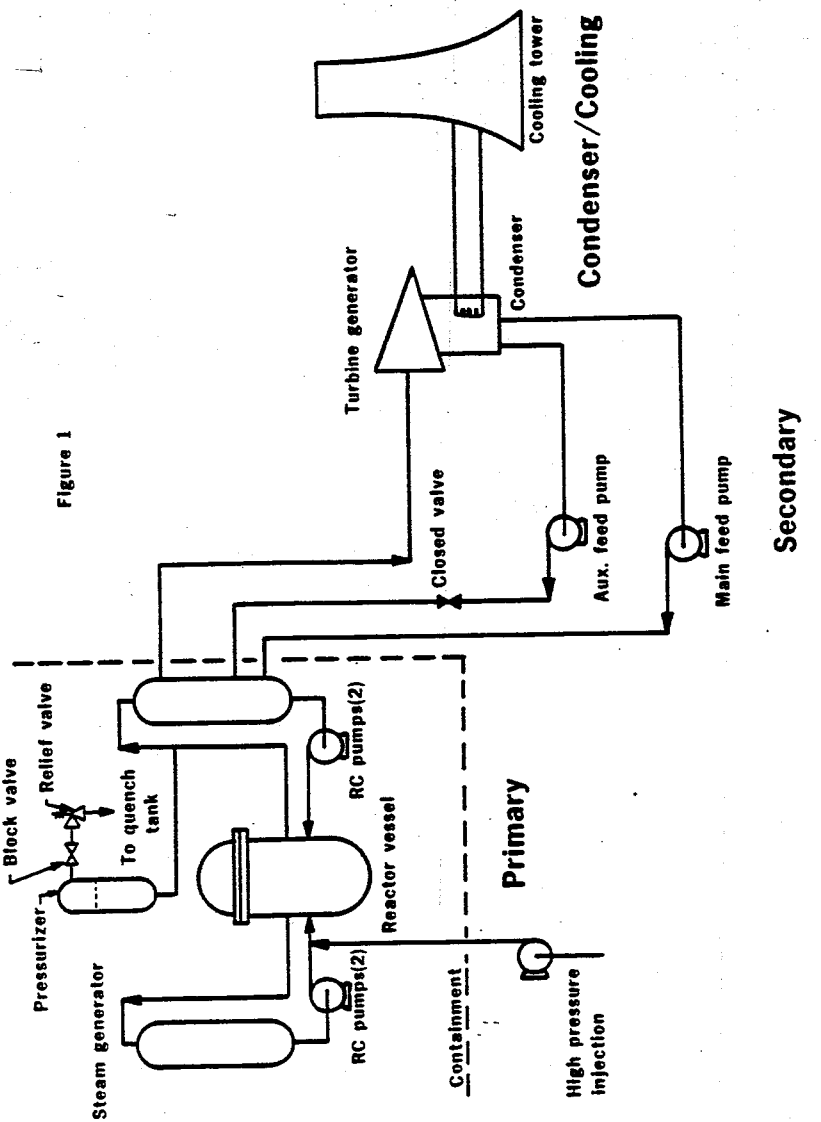
Cooling tower
Condenser/Cooling
Condenser
Turbine generator
Closed valve
Aux. feed pump
Main feed pump
Secondary
Block valve
Relief valve
To quench tank
Pressurizer
RC pumps(2)
Reactor vessel
Steam generator
RC pumps(2)
Containment
Primary
High pressure injection

Figure 1

The primary loop contains the following major components, all of which are located in the containment building: reactor vessel, steam generators, pressurizer, and reactor coolant pumps. The reactor vessel is approximately 14 feet inside diameter with walls approximately 9 inches thick made of steel with an inner lining of stainless steel. It houses the fuel assemblies which are zircaloy tubes housing slightly enriched uranium. Control rods which contain material which controls the rate of nuclear reaction are also contained in the reactor vessel. These control rods move up and down within the fuel assemblies to vary the power from 0% to 100%. The steam generators are pressure vessels approximately 68 feet high with an inside diameter of approximately 13 feet. They contain thousands of nickel-iron-chromium alloy tubes roughly twice the diameter of a pencil. The pressurizer is a high pressure vessel vertically mounted which provides a steam surge chamber and water reserve which can be used to maintain desired reactor coolant pressure. The reactor coolant pumps, 2 per steam generator, are very high capacity pumps which deliver reactor coolant flow throughout this primary system. Heat which is generated from nuclear reaction of the uranium contained in zircaloy clad fuel pins is transferred to water circulating through the reactor vessel under high pressure and flow around the fuel pins. This heated water is carried through piping to the steam generators where the heated water passes through the tubes in the steam generator and returns to reactor coolant pumps to recirculate it through the reactor around the fuel pins again. The primary system maintains its pressure through the use of

the pressurizer. The pressurizer maintains reactor coolant pressure at desired level through actuation of the heaters or spray in the pressurizer. This is a closed system. (Figure 2)

The secondary system contains the steam generators, the turbine generator, condenser, heaters, and main and auxiliary feedwater pumps. As the heated water from the reactor is passing through the tubes in the steam generator different water from the secondary system is pumped around the outside of the tubes and the heat is transferred through the nickel-iron-chromium alloy material making up the tubes to turn this water into steam which then leaves the upper region of the steam generator and passes through piping to drive the turbine. As the steam is cooled passing through the turbine and further cooled in a condenser, it returns to its liquid state and again begins its return to the steam generator. After leaving the condenser and passing through a condensate system, it returns to the feedwater pumps to be circulated through the steam generators again. This is the secondary loop and is essentially a closed system.

The third loop contains the cooling towers and condenser which use a water source, such as a river, to cool the steam leaving the turbine-generator through heat transfer in tubes in the condenser and turn the steam in the secondary system back to water for its return through the secondary steam and its reconversion to steam. (Figure 1)

Nuclear steam system

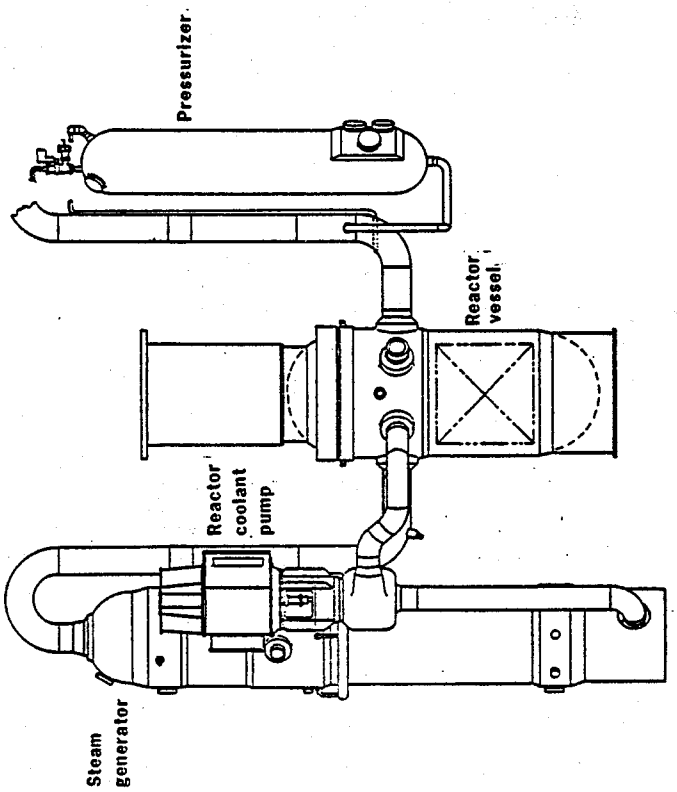

Figure 2

Recalling the earlier discussion of the division of responsibilities between the participants in the design, manufacture, and construction of a nuclear power plant, the following comments are generally applicable with respect to a pressurized water nuclear steam system. First, the major components of the primary loop are the design and manufacture responsibility of the NSS supplier. The secondary loop and the condenser/cooling loop are generally the design responsibility of the engineering firm with specific component design and manufacture responsibility laid upon various manufacturers such as the manufacturer of the turbine generator.

Additionally, there are split responsibilities and interfaces between the participants. An example of such a split is in the primary system, where the NSS supplier designs and fabricates the major components and specifies certain parameters which must be met within the engineering firm's design of the containment, and where the engineering firm has full design responsibility for the containment building itself and the location of certain components within the containment.

Against this background the following describes the sequence of events and significant factors of the incident at Three Mile Island.

First, we will develop an overview of the sequence of events at TMI. Following that, with the overview serving as a context, we will provide our views concerning the significance of the factors in that sequence.

Figure 3 (next page) is a diagram of the secondary system at Three Mile Island. Steam from steam generators shown on the right goes up through the main steam lines and is admitted to the turbine, and then into the condenser. Condensate pumps take suction from the condenser and pump through the condensate polishing equipment, through condensate booster pumps, low pressure heaters, main feedwater pumps high pressure heaters, back through feedwater control valves and into the steam generator. In the absence of main feedwater flow, three auxiliary feed pumps, two electric and one steam driven, can draw directly from condensate storage tanks or from the main feed system and pump through control valves into the steam generator.

What happened in the initiating event at Three Mile Island was apparently the result of work being performed on the condensate polishing equipment. In the process, that equipment was isolated so that the feedwater flow was interrupted. Suction pressure to the feedwater pumps was lost and they both shut off. This interrupted the feedwater flow to the steam generators. In that circumstance, safety systems called for the auxiliary pumps to start automatically and the turbine to trip. Both of those happened as designed. Control valves functioned as required - the operator looked at his panel and his debriefing has indicated that he established that there was pressure at the discharge of the feedwater pumps. He, therefore, probably assumed that the auxiliary feedwater system was operating the providing flow to the steam generators. What in actuality occurred was the isolation valves downstream of the of the control valves were closed in violation of technical procedures and they should have been open. The interim sequence

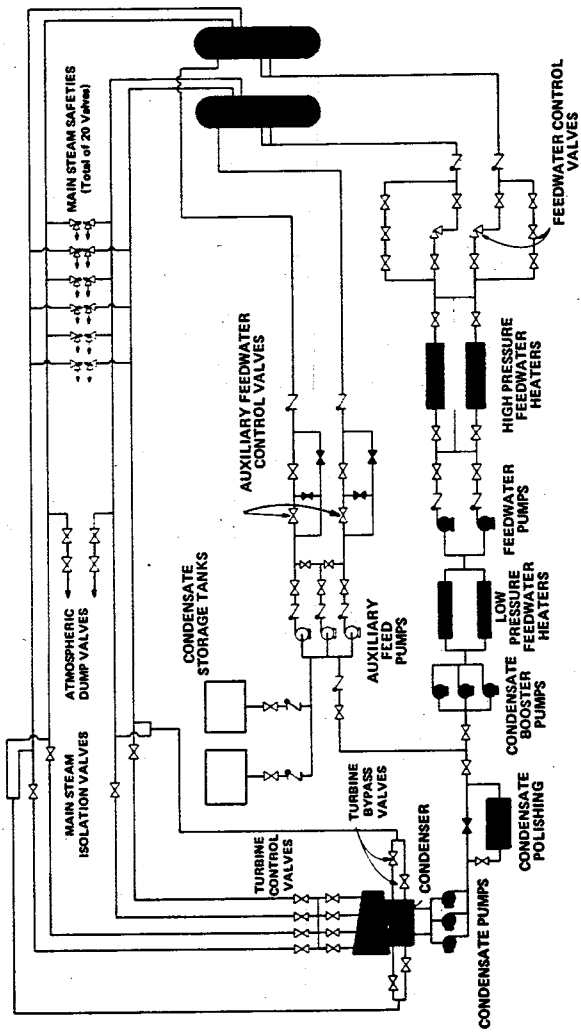
Secondary System
MAIN STEAM SAFETIES (Total of 20 Valves)
ATMOSPHERIC DUMP VALVES
MAIN STEAM ISOLATION VALVES
CONDENSATE STORAGE TANKS
AUXILIARY FEEDWATER CONTROL VALVES
AUXILIARY FEED PUMPS
TURBINE BYPASS VALVES
TURBINE CONTROL VALVES
CONDENSER
CONDENSATE POLISHING
CONDENSATE PUMPS
CONDENSATE BOOSTER PUMPS
LOW PRESSURE FEEDWATER HEATERS
FEEDWATER PUMPS
HIGH PRESSURE FEEDWATER HEATERS
FEEDWATER CONTROL VALVES

FIGURE 3

of events published by the NRC states that operators apparently failed to note the position indication lights of these valves in the control room until about 8 minutes into the transient. These closed valves precluded the admission of auxiliary feedwater to the steam generators for that period of approximately 8 minutes. During this time then there was no feedwater being introduced to the steam generator.

Figure 4 (next page) is a diagram of the reactor coolant or primary system. Briefly the flow paths in this system are the reactor outlet line going into the steam generator, two lines coming out through circulating pumps back into the reactor vessel. Also shown schematically and not by actual physical elevation is the pressurizer which is connected to one of the reactor outlet lines or hot legs. On top of the pressurizer are two code safety valves and a pilot operated relief valve with an isolation valve upstream of it. All discharge lines from these pressurizer valves go to the quench tank. The quench tank has a relief valve not shown on Figure 4 and a rupture disc which protect the integrity of the tank if the pressure gets too high. These devices discharge into the reactor building, or containment. Also shown on Figure 4 are the various emergency core cooling systems. The high pressure injection system delivers water into the reactor inlet, or cold legs of the reactor system. Intermediate pressure injection is provided by two core flood tanks which are maintained at pressure by a gas pressure. If pressure is low enough in the primary system, these tanks dump their contents into the reactor vessel.

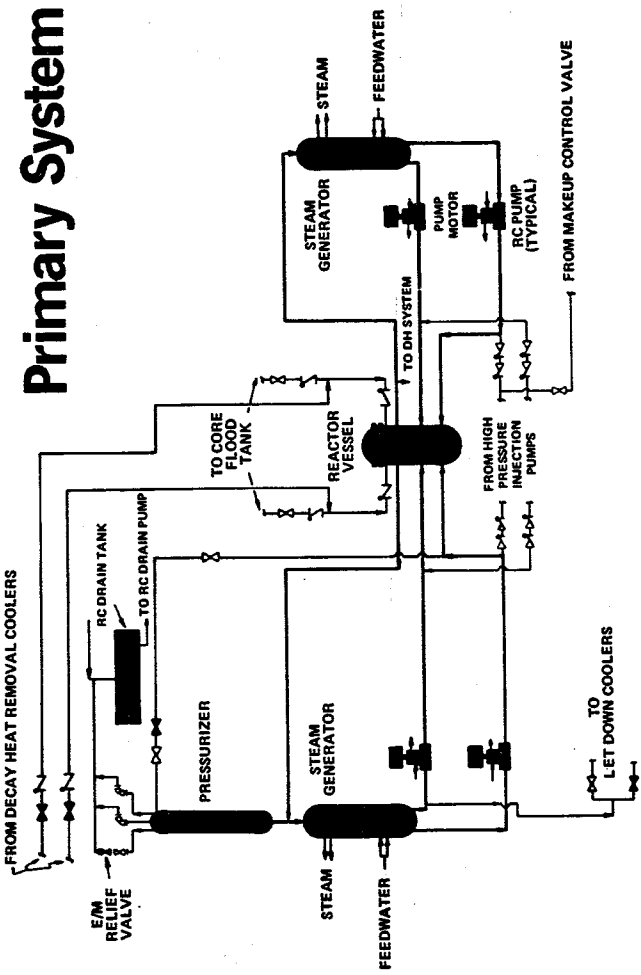
Primary System
FROM DECAY HEAT REMOVAL COOLERS
RC DRAIN TANK
TO RC DRAIN PUMP
E/M RELIEF VALVE
PRESSURIZER
STEAM GENERATOR
STEAM
FEEDWATER
TO CORE FLOOD TANK
REACTOR VESSEL
TO DH SYSTEM
FROM HIGH PRESSURE INJECTION PUMPS
STEAM GENERATOR
STEAM
FEEDWATER
PUMP MOTOR
RC PUMP (TYPICAL)
FROM MAKEUP CONTROL VALVE
TO LET DOWN COOLERS

FIGURE 4

With the feedwater flow to the secondary side of the steam generator having been interrupted, there was limited capacity for removing heat. The steam generator was boiling dry and the reactor coolant system began to heat up and pressure in the reactor coolant system began to increase because of expansion. The pressure in the reactor coolant increased until the pilot operated relief valve opened at about 6 seconds. Pressure continued to increase to the point where the reactor was automatically tripped, or automatically shut down. As a result, the reactor coolant pressure then started to decrease and dropped down to around 1300 or 1400 psi. As it decreased, the pilot operated relief valve should have closed. It did not. As pressure dropped to approximately 1600 pounds, the high pressure injection pumps started up automatically by action of the safety system. The pressure dropped to the point where there was flashing or instantaneous creation of steam in the hot leg of the reactor coolant system and that was what was holding the pressure up.

During that period the pressurizer level fluctuated and started to increase. As the level approached a full pressurizer the operator apparently cut back on the high pressure injection flow to maintain pressurizer level. As time progressed without additional water entering the reactor coolant system and pressure continuing to drop, primary coolant water began to flash to steam. The reactor coolant pumps then began to operate erratically. Two pumps in the B loop were turned off at 73 minutes and two pumps in the A loop were turned off at about 100 minutes into the accident. After that, with forced circulation terminated and emergency core cooling

through high pressure injection reduced by operator action, all the evidence seems to indicate that the water boiled out of the reactor coolant system. This occurred during the period from 2-4 hours after the start of the accident, or from 6:00 AM to 8:00 AM.

It was apparently during that time that most of the core damage occurred. There was evidence of very substantial zirconium-water reaction which generated hydrogen and the much publicized gas bubble in the primary system.

Ultimately, through a combination of advice from various sources, including B&W, high pressure injection was re-established at a sufficient flow, pressure was brought up in the system and a reactor coolant pump was put back into service. The last of these actions was not completed until almost 16 hours after the accident began. It was at that time that a cooling configuration was established which was maintained for a matter of several days while everyone concerned looked at the total picture of how to recover from that situation and get into a long term cooling configuration.

With this overview of the TMI sequence of events in mind, it is appropriate to move into a discussion of the significance of the factors in that sequence.

- First, after the loss of feedwater occurred, two closed isolation valves prevented auxiliary feedwater from reaching the steam generators for a period in excess of eight minutes. This eliminated the capability of the steam generator to remove heat from the reactor coolant system, and resulted in a corresponding increase in reactor coolant system temperature and pressure, and diminished

the ability of the plant to promptly stabilize reactor coolant system temperature and pressure as designed.

- Second, as a result of the initial reactor coolant system pressure and temperature increase, the pilot-operated pressurizer relief valve (located at the top of the pressurizer) opened as designed, but did not reseat properly, thus allowing reactor coolant system pressure to continue decreasing. After approximately 2-1/4 hours, the operators recognized the data from plant instrumentation which indicated that the valve was open (including quench tank rupture at 17 minutes), and closed the block valve in the relief valve discharge line, thus preventing any further loss of primary coolant.
- Third, the high pressure injection system, which had automatically actuated as designed on low reactor coolant system pressure, was prematurely terminated by the operator even though there were simultaneous indications of an opening in the reactor coolant system pressure boundary, such as increasing quench tank pressure, decreasing reactor coolant system pressure and increasing reactor containment pressure. This led to a diminished capability to cool the reactor core as primary coolant inventory diminished. Subsequent analyses have indicated that there would not have been core damage or significant radioactive contamination and release if the operators had left the high pressure injection pump in service to perform the core cooling function for which they were intended.

- Fourth, the containment isolated in accordance with the licensed design. However, this allowed the transfer of radioactive water from which subsequent radiation releases occurred.
- Fifth, high pressure injection was evidently manually operated based on high pressure level indication. We have conducted reviews of data from Three Mile Island and performed analyses that lead us to conclude that the indicated pressurizer level was not significantly in error. We believe that the pressurizer was essentially full during a long period of this transient but a portion of the reactor coolant system developed steam voids due to the decrease in system pressure. This conclusion has been supported by an independent NRC study. Consequently, operation of high pressure injection flow should not have been based on the single parameter of pressurizer level.
- Sixth, in addition to two reactor coolant pumps having been shut off at 73 minutes, the remaining two reactor coolant pumps were shut off at 100 minutes after the initiation of the incident. Although shutting off one reactor coolant pump in each loop in response to indications of low coolant flow may be advisable, shutting off all pumps under the circumstances then present is believed to have caused an uncovering of the core and a degradation in core cooling capability. Ultimately, at about fifteen hours after initiation of the transient, the reactor coolant system was repressurized, and at about 16 hours the reactor coolant pumps were restarted.

Our analysis of the six factors identified by the NRC has yielded a set of four basic principles which we believe warrant emphasis in considering any future action.

First, renewed emphasis must be placed in the near term on administrative controls to assure that plant systems important to safety are not defeated. In the longer term, consideration should be given to whether plant systems to augment those administrative controls should be developed and implemented.

Second, renewed emphasis must be placed on maintaining the individual operator's focus upon the fundamental physical processes which assure core cooling, and on ensuring that systems complement or increase the likelihood of maintaining that focus.

Third, operator training programs must be reassessed and upgraded to emphasize these fundamentals.

Fourth, any actions or modifications implemented must be considered in the broader context of total plant safety. Hasty and ill-considered actions, which might be partially responsive to the TMI-2 events, could, in certain cases, produce adverse impacts in other safety systems which were not involved at TMI-2.

In response to an additional request of the Subcommittee, the following is a brief description of the Babcock & Wilcox designed once-through steam generator and its characteristics.

As previously indicated, the steam generator is a pressure vessel approximately 68 feet in height and 13 feet in diameter containing approximately 15,000 small diameter nickel-iron-chromium alloy tubes. These tubes are held in a uniform pattern along their length by tube support plates.

Reactor coolant, at approximately 600°F and 2200 psi, enters the single inlet nozzle at the top of the once through steam generator and flows downward through the tubes either under forced circulation from the reactor coolant pumps during normal operation or by natural circulation during those emergency operations when the reactor coolant pumps are not operating. The reactor coolant then exits at the bottom of the steam generator through two outlet nozzles. Recalling the early discussion and diagram 1, this is the steam generator's role in the primary system.

Secondary system feedwater is introduced into the steam generator through inlet nozzles at the side of the vessel. This water enters tube bundle at the bottom of the generator and then passes upward between the tubes which contain the primary coolant. Heat is transferred through the tube walls from the primary coolant to the feedwater. The feedwater turns to steam and then superheated steam as it passes upward between the tubes to the top of the generator and exits at outlet nozzles located on the side of the generator. This steam then goes to the turbine generator as previously indicated.

The once-through steam generator functions as an efficient counterflow heat exchanger which delivers superheated steam. The operating characteristics are such that the steam is produced at a constant pressure over the entire operating range from 15 to 100% full power. Higher plant efficiencies result from these characteristics.

The basic difference in the primary system between the once-through steam generator design and the other steam generator design used in pressurized water reactor systems, variously known as recirculating or U-tube generators, is that in the once-through design the reactor coolant enters the generator at the top and the upper tubesheet directs the flow through the tubes toward the bottom tube sheet which allows the reactor coolant to exit the steam generator at the bottom. The recirculating or U-tube generator has its reactor coolant enter the generator at the bottom into its single tubesheet and then go upward through the tubes which bend in a U-shape at the top of the generator. The coolant flows through the "U", bends, and returns downward to the bottom of the steam generator through the same tube sheet and exits the steam generator at the bottom. The incoming reactor coolant is kept separate from the exiting reactor coolant through use of a separator.

The basic difference in the secondary systems between the once-through steam generator and the U-tube or recirculating steam generator is that in the once-through steam generator the feedwater is all turned to superheated steam on a single trip through the generator while in the U-tube or recirculating steam generator as the feedwater passes upwards through the tube bundle a part of it

turns to non-superheated steam and a part of it remains water which returns down to the bottom of the steam generator to return or "recirculate" up through the tube bundle again.

Simplified diagrams of the two types of steam generators follow as Figures 5 and 6.

While the once-through steam generator in combination with the secondary feedwater system are generally similar in all the plants utilizing Babcock & Wilcox nuclear steam systems, there are differences in the actual feedwater systems because of the utilities' or their engineering firms' different designs. As indicated previously, the secondary system design and scope of supply in a nuclear plant are not within Babcock & Wilcox's scope of supply.

The Babcock & Wilcox input to the utility or its engineering firm with respect to the secondary feedwater system is to specify requirements of the feedwater in quantity and quality of the water.

Lastly, what are the generic technological implications of Three Mile Island?

While the incident at Three Mile Island was certainly very unfortunate and its seriousness should not be minimized, important lessons have been and will continue to be learned about electric power generation through the use of nuclear energy.

Three Mile Island has emphasized the importance of the man-machine interface and the need for translating the designer's concepts into unambiguous information and instructions for plant operation. With the advancements in electronic and computer technology there are three general areas in which the man-machine interface can be improved.

Once through steam generator

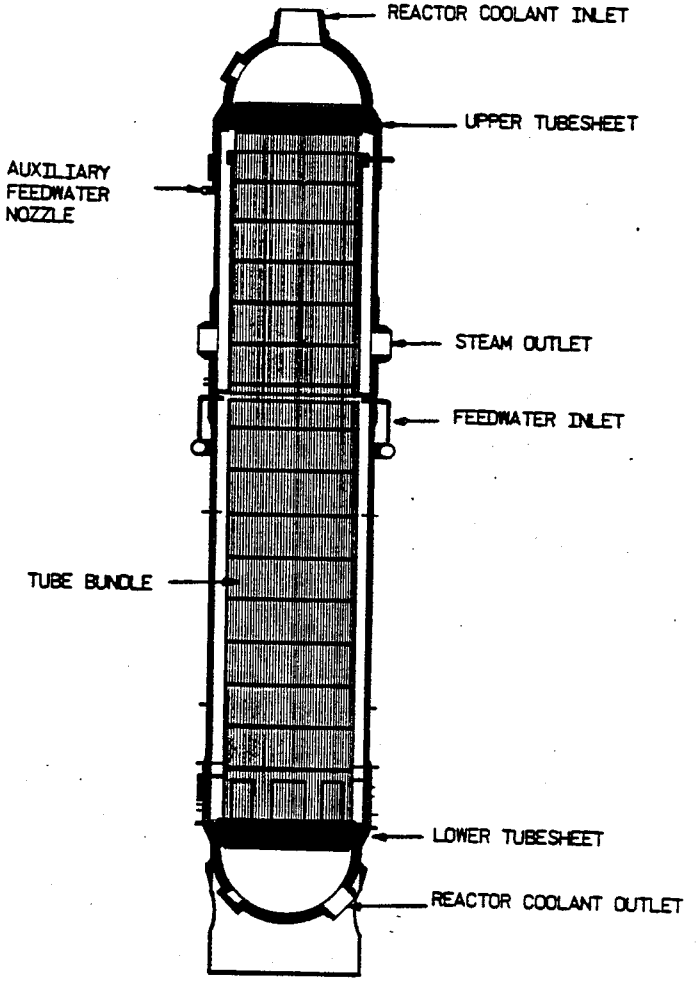

FIGURE 5

Recirculating steam generator

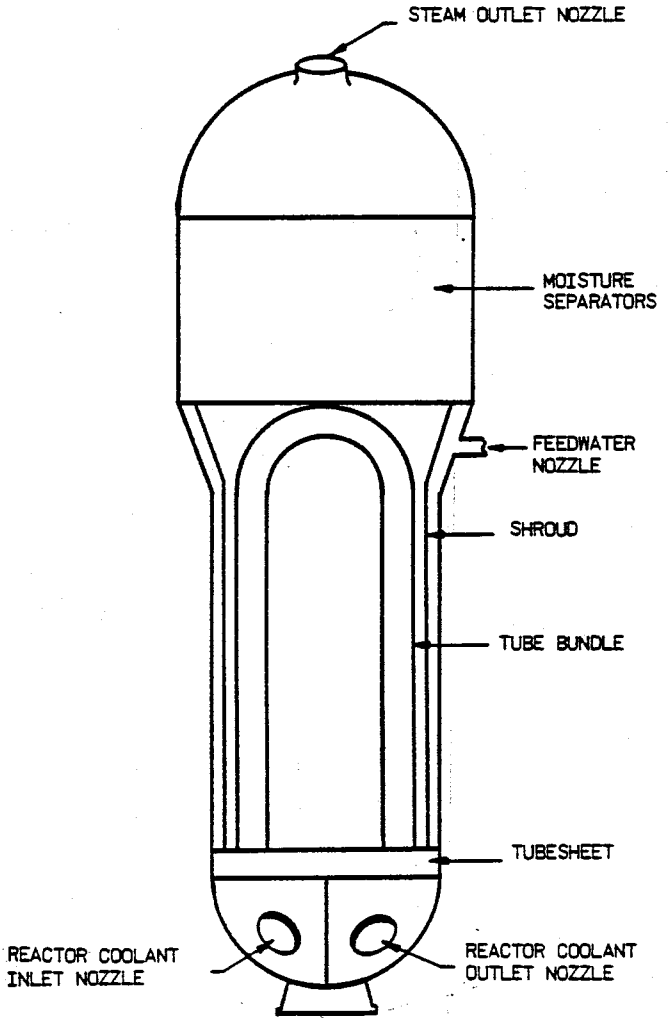

FIGURE 6

- First, the measurement and display of the actual condition of vital operational equipment and instrumentation.
- Second, the display of plant conditions in a format to enhance the operator's awareness of the system condition and trends or directions in which the system is moving.
- Third, remote visual monitoring of vital plant equipment to confirm instrumentation indications already available.

In addition to providing better display of plant conditions for the operator, recording plant conditions and being able to retrieve these data in graphic display would help with trouble-shooting and subsequent diagnosis of operational problems by the plant engineersand designers.

In other words, examine the parameters to be measured or monitored to assure that actual conditions are displayed. Display these conditions to the operator in a fashion which is simple to understand, shows graphically the important data and trends. Assist the operator in diagnosing unusual conditions and suggest appropriate corrective measures. And finally, provide him with back-up remote visual means of confirming the operating status of vital equipment. Some people have called these suggestions "human engineering". The crucial lesson of Three Mile Island is the need to improve the man-machine interface and provide means of assisting the operator in both the operational and administrative aspects of his job.

In conclusion, Babcock & Wilcox continues to be committed to nuclear power as a means of generating electricity to meet our nation's needs. While the incident at Three Mile Island was serious the lessons learned will enable the industry to better serve the nation in future generations.

Mr. MACMILLAN. In my full statement, I have spelled out at the beginning the role of the various participants in a nuclear plant—the utility, the NRC, the engineering firm, and the manufacturer of equipment, such as Babcock & Wilcox.

As a general rule, the responsibilities of the nuclear steam system manufacturer, are first to design and manufacture, and provide the components of the primary system and the reactor safety system, supporting instrumentation and control, to provide interface information to the engineering firm for the balance of the plant, and to provide licensing and startup support to the utilities.

The general responsibilities of the engineering firm or the utility, if they do their own balance of plant engineering, is to coordinate the design of the entire plant.

At Three Mile Island, Burns & Rowe was the engineering firm on the balance of plant. Their responsibility was to provide the containment design and the design of the balance of plant—that is, that part of the plant which is not a part of the nuclear steam system—and to integrate the various participants work scope in the overall plant design.

The NRC, of course, reviews the plant designs and approves them, issues a construction permit as required by the Atomic Energy Act prior to commencement of any significant construction, issues an operating license prior to fuel loading, following its approval of the final design, establishes criteria and requirements for licensing of the operators, issues operator licenses, and finally monitors the operation of those plants once they have gone into service.

That very briefly puts into perspective the roles of the major participants in the design, development, construction, initial operation of the plants—the utility being the organization that of course is the ultimate customer and the ultimate operator, ultimate licensee of the plant.

Now, with that background I would plan to go through a brief description of the sequence of events that happened at Three Mile Island on the morning of March 28, and then review with you after that the significance of these, as we see them.

I have brought with me a very simplified chart of the total plant, which is somewhat different than appears in the prepared testimony. It is a much more simplified diagram. I would like to use this as an outline for the discussion of the events.

Mr. MCCORMACK. Good. We can see it very well. It will help us.

Mr. MACMILLAN. You will see in blue what we call the primary system of a nuclear plant, with the reactor vessel here in the center, where the reactor core is located.

Coolant circulate, through the reactor core, as you have just seen a demonstration, going out to the steam generators—in our case once through steam generator—entering the top of the generators, flowing down through the generator, exiting at the bottom, being circulated back to the reactor vessel by two reactor coolant pumps, two in each loop, and back into the reactor vessel.

On the secondary side of the steam generators, feedwater normally is fed into the generator, converted to steam in one pass through the generator, steam then is admitted to the turbine and in the condenser where the steam is cooled and returned to the water state, and then pumped back into the steam generator.

In the event where main feedwater is lost, there is an auxiliary feedwater system provided as an emergency backup system. It can either take suction from condensate storage tanks or from the main feedwater system, and it is shown here taking suction from the condenser.

Auxiliary feedwater pumps pump water into the top of the steam generator, where it can provide for cooling in a natural circulation mode, and provide for the cooling of the reactor coolant system for emergency condition.

Shown as a part of the primary sytem is a pressurizer, which has a surge line coming off the hot leg, or the high temperature leg of the reactor coolant system. Normally in that system is a water-steam interface.

The water is maintained at saturated temperature, corresponding to a little over 2,000 pounds per square inch by electrical heaters. If the pressure rises to the point of about 2,350 pounds, there is a pilot operator relief valve which will relieve that pressure.

That valve discharges into a quench tank within the reactor building, the quench tank not being shown on this diagram.

There are also safety valves on the top of the pressurizer which are set to relieve at about 2,500 pounds pressure. They also vent into or discharge into the quench tank.

Upstream of the pilot operator relief valve is a block or isolation valve, put there for the purpose of isolating that relief valve if it should fail to reseat.

The safety valves do not have isolation valves. They are precluded from having those by code. The purpose of the pilot operator relief valve is to open and relieve the pressure without challenging the safety valves in the event a transient occurs which requires some pressure relief.

Shown schematically here is a high pressure injection system which you just heard about. It pumps water into the reactor coolant system at high pressure and provides for emergency core cooling in the event that there is a small break in the reactor coolant system and emergency cooling is required through the high pressure injection system.

The heat from the condenser is taken out by the green system shown here, which is in this case showing the use of cooling towers for the ultimate removal of the low temperature, low energy heat from the nuclear system.

Now, that is a description of the system. Let me go through the sequence of events that occurred on the morning of March 28.

At about 4 o'clock in the morning, while operating with equipment, polishing equipment in the main feedwater system—that equipment is not shown in this simplified diagram—by a sequence of events which is still under some review, the net impact of which, however, was to interrupt the main feedwater flow. The main feedwater pumps lost suction pressure and under those conditions, as designed, they shut down.

That interrupted the feedwater flow to the steam generator and, as designed, in that circumstance, the auxiliary feed water pumps came on. They are two electric driven pumps, one steam driven pump, and all three came on.

The turbine tripped, as designed, shutting down the turbine generator.

The operator testified that he had checked the discharge pressure on those auxiliary pumps and ascertained that the pumps had come on, and there was pressure in that discharge header. Then he went about other activities required in the event of loss of feedwater flow.

Interrupting the flow of feedwater to the steam generator, which is a normal cooling mechanism for the reactor system, caused the reactor coolant system to heat up because the reactor is still delivering heat.

As the reactor system heats up, it expands, and increases the pressurizer level, the water level in the pressurizer, and that compresses the steam at the top of the pressurizer. Within a matter of about 4 seconds it reached a pressure at which the pilot operator relief valve opened.

The pressure continued to rise after that, since there was still more heat being put into the reactor coolant system than was being taken out in the steam generators, to the point at which the reactor protective system automatically shut down the reactor, scrammed the rods, and stopped the fission process.

As Dr. Schoessow said, there continues to be about 10 percent heat energy from the decay products being put into the reactor coolant system.

Mr. McCormack. The shut down came at about 9 seconds?

Mr. MacMillan. About 8 or 9 seconds. The pressure then did turn around and decrease, and reached the set point at which the pilot operator relief valve would normally have reseated.

In this particular case, the valve stuck open, this valve here, the pilot operator relief valve, and pressure continued to decrease, and dropped down to a pressure in the range of 1,300 or 1,400 pounds over the next several minutes.

When the pressure dropped below 1,600 pounds, the emergency safety systems call for the automatic startup of the high pressure injection pump. In fact that happened. Those pumps came on. They started to pump water into the reactor, the reactor coolant system.

Those pumps came on at about 2 minutes into the accident. So we are still very early in the accident sequence.

Mr. McCormack. This was tripped by abnormally low pressure.

Mr. MacMillan. Yes, abnormally low pressure in the coolant system. Normally you operate over 2,000 pounds. If the pressure for some reason drops down below about 1,900 pounds, that is low enough so the safety system will shut the reactor down.

The reactor had already been shut down by high pressure in this sequence. When the pressure drops down to 1,600 pounds, then the safety system, recognizing that is an abnormally low pressure, automatically starts the high pressure injection pumps.

The system pressure continued to decrease because the relief valve is still open, and still blowing steam, or the combination of steam and water out of the pressurizer, until it reached a pressure around 1,300 or 1,400 pounds.

That is the pressure at which you have reached saturated conditions in the high temperature leg of the reactor. At that point, you

start flashing water in the high temperature leg of the reactor and forming steam in the reactor coolant system itself.

Mr. McCormack. That is because the pressure goes down, and the temperature is still what?

Mr. MacMillan. The temperature in this hot loop is still up around 575°.

Mr. McCormack. So at that temperature, in dropping down to 1,300 pounds, it causes the water to flash to steam.

Mr. MacMillan. That is correct. In the hot leg of the reactor system.

Now, during this time the pressurizer level fluctuated and started to increase. As the level approached the full pressurizer, the operator apparently cut back on the high pressure injection flow, emergency pump operation here, in order to maintain pressurizer level.

This is now about 3 minutes into the accident.

Mr. Wydler. I don't understand that. Why would the pressure start to increase? That is still open, isn't it?

Mr. MacMillan. This valve is still open. But remember, we are still in a situation—I forgot one very important item, I am sorry.

The auxiliary feedwater pumps came on, as I indicated, right at the early part of the incident. But auxiliary feedwater was not allowed to flow to the steam generator because of closed block valves.

This closed valve right here precluded the auxiliary feedwater from reaching the steam generator. So in the first 8 minutes of the accident there was no auxiliary feedwater to the steam generator.

Therefore, there was no means of taking heat out of the reactor coolant system, and the reactor coolant system continues to increase in temperature, to increase therefore in volume, continues to pressurize in the reactor pressurizer here, and the pressure was going up.

That is when the pilot operator valve opened, pressure decreased, and since this valve is still open, it continues to relieve water from the reactor, steam from the pressurizer.

What is happening, and the reason the level apparently is increasing, as you form steam in the reactor hot leg you get a steam bubble in the hot leg which forces water up into the pressurizer, and makes it look as though the pressurizer level is increasing.

In fact, the pressurizer, from all the evidence we have, was full of water at this point. But there was steam being formed in the reactor coolant system.

Mr. Wydler. I can understand why it is getting hotter. I don't understand why the pressure was building up.

Mr. MacMillan. The pressure is not building up.

Mr. Wydler. You just said it did and gave a signal to one of the men in the control room, so that he started another procedure.

Mr. MacMillan. No. The pressurizer level was increasing. The level at which——

Mr. Wydler. Not the level of pressure.

Mr. MacMillan. The level of water in the pressurizer was increasing. He was monitoring that pressurizer level. As he saw that pressurizer level go up, apparently he cut back on the high pressure injection, in order to keep that pressurizer from becoming full.

Mr. ERTEL. If the gentleman would yield for a second.

Mr. WYDLER. If you just let me finish this. You say these two—the original pump shut down and the auxiliary pump went on. But even though it was on, it wasn't pumping any water because the valve was closed.

But there was nothing to indicate to anybody that no water was going in, right? It just says the pump is running. You have something that says the pump is running, but you don't have anything that says water is flowing. Is that the way the system works?

Mr. MACMILLAN. Normally, the indication that water would be flowing would be the level of water in the steam generator. You would expect to see as the auxiliary feed water comes on, you would expect to see the level come up in the steam generator.

Ultimately, the operator recognized that situation and at that point realized that the block valves were closed and at 8 minutes into the incident, he opened those block valves with operators——

Mr. WYDLER. You said there was water coming in on this side, the blue system, the primary system. You said water was coming in there.

Mr. MACMILLAN. There is water coming into the reactor coolant system through the high pressure injection phase.

Mr. WYDLER. So it was receiving water.

Mr. MACMILLAN. It was receiving high pressure injection water. But it was not receiving any cooling water on the secondary side of the steam generator.

Mr. ERTEL. You have two isolated systems.

Mr. WYDLER. The blue system puts the water in the reactor vessel, doesn't it?

Mr. MACMILLAN. Let me go back again and say this.

The blue system is a closed circulation system which circulates water normally at about 2,000 pounds pressure through the reactor core, through inside the tubes in the steam generator, and back into the reactor core. It is a closed circuit.

Mr. WYDLER. That is putting the water in the reactor core.

Mr. MACMILLAN. Normally that water is circulated through the reactor core by the reactor coolant pumps themselves.

Mr. WYDLER. And that system was on.

Mr. MACMILLAN. That system was on. Water was circulating through the steam generator and the reactor core. However, there was no water on the secondary side of the steam generator.

They had, at one point in the event, essentially boiled dry, and there was no water coming in here so that it could be converted into the steam and remove heat from that steam generator.

Mr. WYDLER. The only thing—and then I will yield to the gentleman—the only thing that I was trying to get clear in my mind was, because we have heard that the core—we are just talking about the core—it was uncovered at some point.

Maybe you will get to that. I don't understand that because apparently there was a system on and open which was putting water in the core.

Mr. MACMILLAN. OK. I think I will get to that.

Mr. MCCORMACK. The gentleman from Pennsylvania?

Mr. ERTEL. Thank you, Mr. Chairman.

You made a statement that apparently he felt that the water level was going up in the pressurizer and, therefore, believed that there was enough water in the system.

Is there any indication of how he could have read that any other way? Would there have been an analysis he could have gone through to determine, in fact, that was not happening, that he was creating steam somewhere in that core or in the leg there up to the pressurizer?

Is there any way he could have analyzed that on that basis, at that time, to understand the process that was going on?

Mr. MACMILLAN. He has other instrumentation available to him which would have indicated that he had approached saturation conditions in the reactor coolant system, and I think the most significant one is the reactor coolant system pressure itself. The reactor coolant system pressure was continuing to fall during this period and, as I say, dropped as low as 1,300 to 1,400 pounds per square inch, which is abnormally low.

Mr. ERTEL. There is no way to read that out specifically what the water level is in the reactor vessel itself?

Mr. MACMILLAN. There is no water level indicator in the pressure vessel.

Mr. ERTEL. In the pressure vessel or you are talking about the reactor vessel? There is a direct readout of the water level in the pressurizer, is there not?

Mr. MACMILLAN. There is a direct indication of water level in the pressurizer, but there is no indication of water level measure in the reactor vessel.

Mr. ERTEL. So what he has to do is go backward. He has to read the other things, put them together and then determine as a result, a deductive process, what the water level would be in the reactor itself.

Mr. MACMILLAN. In a situation where he has sufficient pressure in the reactor system so he has subcool conditions, the pressurizer level is a clear indication of the water level in the reactor coolant system.

When he gets to conditions where he has saturated pressure and temperature in the reactor coolant system, such as in the hot leg here, because the pressure has dropped way down, is abnormally low, then that level indication in the pressurizer is no longer a valid indication of the water level in the reactor coolant system.

Mr. ERTEL. Were there any written instructions to indicate to him that he should be able to analyze that?

Obviously, sitting here doing it very calmly as you and everybody else is doing, it is pretty easy to analyze this series of events. Now, was there any written documentation, any kind of emergency procedure by which he could have put those things together?

Mr. MACMILLAN. There are emergency procedures which have been written and which describe the symptoms of a small break in reactor coolant system, and those systems would be similar to those that we——

Mr. ERTEL. That was the next question; is there any difference between the relief valve not reseating and a small pipe break anywhere in the system, especially around the pressurizer, in that area; is there any difference?

Mr. MACMILLAN. There are differences, depending on where that break occurs. The small break procedure is intended to cover the break regardless of location.

Mr. ERTEL. Therefore, if he followed the small break procedure it may have been different, depending where. In fact, the relief valve had not reseated, because he would not know where particularly that event took place. The relief valve not reseating is the same thing as a small pipe break; is it not?

Mr. MACMILLAN. That is correct.

Mr. ERTEL. Therefore, depending on where it is in the system, is there a different procedure to be followed?

Mr. MACMILLAN. No, the procedure is the same regardless.

Mr. ERTEL. So he should have followed a standardized procedure in this event?

Mr. MACMILLAN. This event is covered by the small break procedure, and in addition to that there is a procedure for the circumstances where the pilot operator relief valve fails to reseat, and so he had that procedure available also to indicate.

Mr. ERTEL. There is a condition when it fails to reseat; how does he know it does not reseat?

Mr. MACMILLAN. The indications on the failure of the relief valve to reseat are primarily a thermocouple on the pipe which leads from the relief valve to the quench tank which, when its temperature exceeds 200 degrees he gets an alarm and that is an indication that the valve is open.

In addition to that, in the quench tank there are pressure and temperature monitors and alarms which indicate that he is continuing to put energy into that tank and that one of his safety valves—either the safety valve or pilot operator valve—has failed to reseat.

Mr. ERTEL. I have gotten the warning we are out of time.

Mr. MCCORMACK. I know we could sit here all day and ask questions only of Mr. MacMillan, but we do have quite a number of witnesses and we do have to move along.

Mr. MACMILLAN. I believe I was at the point in the sequence where the operator apparently cut back the high pressure injection flow to maintain pressurizer level.

As time progressed without additional water entering the reactor coolant sytem and pressure continuing to drop, primary coolant water began to flash to steam. The reactor coolant pumps then began to operate erratically.

Two pumps in the B-loop, that is the loop shown on the left here, were turned off at 73 minutes and two pumps in the A loop were turned off at about 100 minutes into the accident.

After that, with forced circulation terminated and emergency core cooling through high pressure injection reduced by operator action, all the evidence seems to indicate—and this is about 2 hours into the accident—that the water boiled out of the reactor core and that the core temperatures increased at that point causing the zirconium fuel cladding to oxidize and generate hydrogen, which was, of course, the source of the much publicized gas bubble in the primary system.

Mr. MCCORMACK. Excuse me. You say boil out. Did it boil part way down, the fuel, do you know?

Mr. MACMILLAN. We don't know for sure how far it boiled down. The indications are that the major part of the core was uncovered and it boiled down so that the water level in the core was down in the lower third to lower quarter of the core, and the upper portion of the core was then just sitting in the steam.

Mr. MCCORMACK. Steam at 1,300° or pounds pressure?

Mr. MACMILLAN. At 1,300°. Actually, the pressure at this time was a little bit lower than that.

Ultimately, through a combination of advice from various sources, including B. & W., high pressure injection was re-established at a sufficient flow, pressure was brought up in the system, and a reactor coolant pump was put back into service.

The last of these actions was not completed until almost 16 hours after the accident began. It was at that time that a cooling configuration was established which was maintained for a matter of several days while everyone concerned looked at the total picture of how to recover from that situation and get into a long-term cooling configuration.

That's a brief overview. I would hope it would be a brief overview of the sequence of events, Mr. Chairman. Let me just identify the significant factors as we see them in the sequence, as a wrap-up.

First, after the loss of feed water occurred, two closed isolation valves prevented auxiliary feed water from reaching the steam generators; that was the step I left out, unfortunately, in the early description of the incident. They remained closed in excess of 8 minutes.

This eliminated the capability of the steam generator to remove heat from the reactor coolant system and resulted in a corresponding increase in reactor coolant system temperature and pressure and diminished the ability of the plant to promptly stabilize reactor coolant system temperature and pressure, as designed.

Mr. MCCORMACK. When did the reactor shut down, how far into the accident?

Mr. MACMILLAN. About 8 or 9 seconds into the accident.

Mr. MCCORMACK. Why was not the steam generator on one side then able to handle the cooling, the one still functioning?

Mr. MACMILLAN. Both steam generators were functioning at this time, but the turbine had tripped.

Mr. MCCORMACK. But on the other side, ignoring the right hand side, you have shown that on the other side, there was still a completely intact secondary cooling system, haven't you?

Mr. MACMILLAN. Well, the auxiliary feedwater system does not show in the diagram. It feeds both steam generators.

Mr. MCCORMACK. Does the main system, main feed pump feed both steam generators?

Mr. MACMILLAN. Yes.

Mr. MCCORMACK. So that failure in the main feed pump then cuts off both steam generators?

Mr. MACMILLAN. Yes, sir.

Mr. MCCORMACK. So here's an area where we would probably suggest redundancy, separate systems.

Mr. MACMILLAN. There are elements of redundancy in the system. There are two feed pumps, there are two feedlines. The difficulty was that between the condenser and feedwater there is a

point at which there is one condensate polishing or feedwater treatment system, and that was the source of the initial cutoff of the feedwater flow.

Mr. McCormack. Why did the main feed pump fail?

Mr. MacMillan. It didn't fail; it shut down because it lost its suction pressure, and it lost its suction pressure because the flow from the condenser to that feed pump was interrupted.

Mr. McCormack. Why?

Mr. MacMillan. I am not sure I can answer that in detail. It involved a series of operations that were going on at the time in the operation of the condensate polishing equipment which cleans up the water coming out of the condensers before it gets to the steam generator.

Mr. McCormack. Some sort of special maintenance?

Mr. MacMillan. I think you would put it in the class of maintenance, yes.

Mr. McCormack. In other words, the maintenance operation was the primary cause of the main feedwater system to fail. The first incident, the first malfunction was the main feed pump or the main feedwater system, and that was caused, you believe, by some maintenance, something in the operation that was going on?

Mr. MacMillan. There is evidence maintenance operations in the condensate polishing equipment was the initiating event that interrupted the feed flow, which subsequently caused the feed pumps to trip off the line.

Mr. McCormack. The pump itself did not fail?

Mr. MacMillan. No, sir. The pump stopped when it lost its suction pressure, which is the way it is designed to perform.

Mr. Pease. Mr. Chairman, would you yield?

Mr. McCormack. Yes.

Mr. Pease. I would just like to pursue that point a moment. Was the maintenance work that was being done on the condensate polisher in progress at the time or is it something that had been done in recent weeks or recent days?

Did someone leave a blockage in the pipe, or what happened?

Mr. MacMillan. That was work in progress at the time, just prior to 4 o'clock in the morning on March 28.

Mr. Pease. I see.

Thank you.

Mr. Ertel. Mr. Chairman, will you yield on that point?

I wonder, you say you have not been able to identify exactly what happened in either the condensate pump or what maintenance they were doing. Has anybody other than you?

Mr. McCormack. I would like to request we get that question from utility operators. They will be the ones responsible for that part of it.

Mr. Ertel. I am asking if they did do that or somebody has got it.

Mr. MacMillan. My suggestion is that information should be supplied by the operator.

Mr. Ertel. Do they have it, do you know?

Mr. MacMillan. I don't know.

Mr. McCormack. The next witness?

Mr. WYDLER. Could I just get one thing clear in my own mind: This maintenance was actually in progress at this time, at 4 o'clock in the morning; there was something going on with maintenance?

Mr. MACMILLAN. Yes; they were working on the condensate polishing equipment just before 4 o'clock in the morning. I am not trying to dodge the question. I simply don't know the detailed sequences that the operators were going through that was the initiating event which caused the interruption in the feedwater flow, and I am sure that information is available. I just don't happen to have it.

Mr. MCCORMACK. Go ahead, Mr. MacMillan.

Mr. MACMILLAN. The first item was interruption of the auxiliary feedwater flow that did interrupt flow to both of the steam generators so neither steam generator had feedwater flow going into it.

Second, as a result of the initial reactor coolant system pressure and temperature increase, the pilot-operated pressurizer relief valve opened as designed, but did not reseat properly, thus allowing reactor coolant system pressure to continue decreasing.

After approximately 2¼ hours, the operators recognized the data from plant instrumentation which indicated that the valve was open, and closed the block valve in the relief valve discharge line, thus preventing any further loss of primary coolant from the reactor.

The third significant factor, the high pressure injection system, which had automatically actuated, as designed, on low reactor coolant system pressure, was prematurely terminated by the operator even though there were simultaneous indications of an opening in the reactor coolant system pressure boundary, such as increasing quench tank pressure, decreasing reactor coolant system pressure and increasing reactor containment pressure.

This led to a diminished capability to cool the reactor core as primary coolant inventory diminished. Subsequent analyses have indicated that there would not have been core damage or significant radioactive contamination and release if the operators had left the high pressure injection pumps in service to perform the core cooling function for which they were intended. You saw a demonstration of that a little bit earlier this morning.

Fourth, the containment isolated in accordance with the licensed design. That design was such that it permitted the transfer of some radioactive water from the bottom of the containment vessel into the auxiliary building and subsequent radiation released occurred from that source.

Mr. WALKER. Mr. Chairman, could I interrupt?

When did that occur in the sequence you are talking about? That's where most of the radiation that the public was exposed to came from. Where did that occur and was that a part of a procedure that would normally go into operation of your plant?

Mr. MACMILLAN. I can get a specific time for you. Perhaps I can look up the specific time and get that answer, but it did occur in the early hours of the incident.

The sump pump in the reactor building transfer water from the containment into the auxiliary building when the sump level increases to the point where that pump turns on.

That sump line ultimately was isolated when the reactor building pressure increased to 4 pounds, and the building containment isolation system came on as designed.

Mr. WALKER. So, in other words, this was a part of the inherent design of the plant that allowed the radioactive water to move outside of containment?

Mr. MACMILLAN. This particular piece of equipment or pieces of equipment performed as designed, and I think the significance of this item is the necessity to reassess the containment isolation philosophy, on the conditions under which I would call our isolation of the reactor building.

Mr. WALKER. Isn't that somewhat of a design flaw we ought to correct to make sure any radioactive water remains in containment instead of being pumped out?

Mr. MACMILLAN. That is something we need to reassess and modify.

Mr. WALKER. Thank you, Mr. Chairman.

Mr. MCCORMACK. Go ahead, Mr. MacMillan.

Mr. MACMILLAN. Fifth, high pressure injection was evidently manually operated based on high pressurizer level indication. We have conducted reviews of data from Three Mile Island and performed analyses that lead us to conclude that the indicated pressurizer level was not significantly in error.

There was some discussion early after the accident that there was erroneous pressurizer level indication. Our own investigation would indicate that, in fact, the instrumentation indicated the pressurizer level was, in fact, indicating the amount of water that was in the pressurizer.

Consequently, operation of high pressure injection flow should not have been based on the single parameter of pressurizer level.

Finally, in addition to two reactor coolant pumps having been shut off at 73 minutes, the remaining two reactor coolant pumps were shut off at 100 minutes after the initiation of the incident. Although shutting off one reactor coolant pump in each loop in response to indications of low coolant flow may be advisable, shutting off all pumps under the circumstances then present is believed to have caused an uncovering of the core and a degradation in core cooling capability.

Ultimately, at about 15 hours after initiation of the transient, the reactor coolant system was repressurized, and at about 16 hours a reactor coolant pump was restarted. In looking at these six factors we developed a set of four basic principles which we believe merit emphasis in considering any future action.

First, renewed emphasis must be placed in the near term on administrative controls to assure that plant systems important to safety are not defeated. In the longer term, consideration should be given to whether plant systems to augment those administrative controls should be developed and implemented.

Second, renewed emphasis must be placed on maintaining the individual operator's focus upon the fundamental physical processes which assure core cooling, and on insuring that systems complement or increase the likelihood of maintaining that focus.

Third, operator training programs must be reassessed and upgraded to emphasize these fundamentals.

Fourth, any actions or modifications implemented must be considered in the broader context of total plant safety. Hasty and ill-considered actions, which might be partially responsive to the TMI-2 events could, in certain cases, produce adverse impacts in other safety systems which were not involved at TMI-2.

So we need to look at a total system impact of any changes that are made in the equipment.

Now, Mr. Chairman, I know we are running way behind schedule. I had planned at this point to talk about the steam generator and unique characteristics and compare it with the recirculating generator. I will be glad to do that, but it would take some additional time.

Mr. McCORMACK. Would you mind waiting a little while? If you can stay around until noon we might get back, but we have to hear the other witnesses.

Would you mind; we will improvise our schedule.

Mr. MACMILLAN. Perhaps I ought to move quickly to the closing observations which are directed at the question of technology implications of the Three Mile Island accident. My comments are addressed primarily at those aspects of the accidents which are involved in the prevention, to some extent mitigation, but certainly not recovery. It's too early I think to address the recovery implications of the Three Mile Island incident.

While the incident at Three Mile Island was certainly very unfortunate and its seriousness should not be minimized, important lessons have been and will continue to be learned about electric power generation through the use of nuclear power.

Three Mile Island has emphasized the importance of the man-machine interface and the need for translating the designer's concepts into unambiguous information and instructions for plant operation. With the advancements in electronic and computer technology there are three general areas in which the man-machine interface can be improved.

First, the measurement and display of the actual condition of vital operational equipment and instrumentation. We talked earlier about perhaps the desirability of having a reactor vessel water indicator. That is perhaps an area where there might be some desirable work to be done.

Second, the display of plant conditions in a format to enhance the operator's awareness of the system condition and trends or directions in which the system is moving.

Clearly, an example would be something which would indicate to him very clearly and very vividly the temperature and pressure conditions in his reactor system, and whether he is approaching a saturation condition that might generate steam in the reactor coolant system.

Third, remote visual monitoring of vital plant equipment to confirm instrumentation indications already available.

In addition to providing better display of plant conditions for the operator, recording plant conditions and being able to retrieve these data in graphic display would help with troubleshooting and subsequent diagnosis of operational problems by the plant engineers and designers.

In other words, examine the parameters to be measured or monitored to assure that actual conditions are displayed; display these conditions to the operator in a fashion which is simple to understand; show graphically the important data and trends; assist the operator in diagnosing unusual conditions and suggest appropriate corrective measures and, finally, provide him with back-up remote visual means of confirming the operating status of vital equipment. Some people have called these suggestions "human engineering."

The crucial lesson of Three Mile Island is the need to improve the man-machine interface and provide means of assisting the operator in both the operational and administrative aspects of his job.

In conclusion, Babcock & Wilcox continues to be committed to nuclear power as a means of generating electricity to meet our Nation's needs. While the incident at Three Mile Island was serious the lessons learned will enable the industry to better serve the Nation in future generations.

That concludes my comments, Mr. Chairman, and I will be happy to stay here if it's your desire to discuss the generator later.

Mr. MCCORMACK. With the indulgence of the members, I would like to hold off a discussion of the questions of the design, capacity of the steam generator until after we have heard the testimony of the other witnesses, and then we can have a special discussion on that point alone, because that may take some special time.

So I am going to bypass my questions on whether the B. & W. design is too much of a hot rod, whether there is too little water in the system, whether the once-through system is adequate, and so on.

Let me ask a couple of other questions very directly, and ask for quick answers, if I may.

One of the problems that seems to have occurred is that with the high pressure injection system running we eventually were flooding the receiver tank, or whatever it is downstream from the relief valve, this was filling up the bottom of the containment vessel, and this tripped the sump pump and pumped out the water over to the red waste building.

Water somehow or other was exposed to the ventilating system in the waste building, getting the Xenon-133 out through the ventilating system.

What I don't understand is why in the world there was not a large enough receiving tank inside the containment vessel to receive the water from the high pressure injection system so it would have all been contained there and there would not have been any need to pump it out of the building.

What is the volume? How long can the high pressure injection system run under normal conditions without being interrupted before it overflows the receiving tank inside containment?

Mr. MACMILLAN. Well, under normal conditions, of course, the pilot operated or relief valve would have closed and that would have kept the pressure up, and there would not have been a necessity for high pressure injection.

However, accepting the condition that the pilot operated relief valve stayed open, the quench tank is designed to receive the

discharge from that valve or the safety valves and to quench that for some period of time, and I don't know what that period is.

Mr. MCCORMACK. Well, given the fact we have had a situation now where we have actually both steam generators off, presumably because we had splashing steam in the system and the pumps were turned off so we were pumping water right through the reactor into a quench tank, it strikes me this scenario calls for re-evaluation of the volume of the quench tank.

Mr. MACMILLAN. Normally what would be done in this circumstance is that you would pump the high pressure injection into the reactor coolant system, would go into the quench tank and the quench tank can only take so much water, and then it will open up.

The intent of the system would be for that water to collect in the bottom of the reactor building and should be retained there. The difficulty in this sequence of events was water was pumped out of the bottom of the reactor building and into the waste tank and ultimately on the floor of the auxiliary building.

It is not intended that the quench tank would be able to accommodate the full capacity of the high pressure injection pumps. For example, a small break may occur some other place in the system which would not have access to the quench tank and the water would then spill out on the floor of the reactor containmnent and again would be expected to be retained there.

Mr. MCCORMACK. Yes, Dr. Roy?

Dr. ROY. I was just going to add that ultimately that water that is spilled to containment and maintained in the sump and will be recirculated back to cool the core.

Initially, the high pressure injection system will take suction from the large storage tank in supplying the water and then ultimately when that storage tank is exhausted then the source of supply to the high pressure injection system will be from the sump, the water.

Mr. MCCORMACK. Is that clean enough to pump back through the reactor?

Dr. ROY. Yes, sir.

Mr. MCCORMACK. OK.

I have two quick questions.

Who trains the operators for B. & W. plants?

Mr. MCMILLAN. The operator training program is an extensive program involving classroom training and then simulator training and then on-site training, and we perform a segment of that total training program.

Mr. MCCORMACK. You do part of it?

Mr. MACMILLAN. We do the simulator training for the operators. We do offer the broader spectrum, but in the case of Three Mile Island it was the simulator training.

Mr. MCCORMACK. Then the utility does the rest; is that right?

Mr. MACMILLAN. Or someone they would hire to do that; yes.

Mr. MCCORMACK. We don't have a standard for training operators in this country?

Mr. MACMILLAN. Each utility develops its own training program.

Mr. MCCORMACK. Generally, is B. & W. exploring the possibility of dramatically improving various pieces of equipment, such as

those that failed in this particular incident, such as the pressure release valves and those that did not provide adequate or provided confusing information?

Is there an attempt now to review the whole concept, first of all being certain that valves will work, that equipment will work, being certain that the operators know whether it has worked or not and being certain that the operator has all of the information he needs easily understandable before him, in any sort of an anomaly?

Mr. MACMILLAN. Let me answer that in two parts, Mr. Chairman.

First of all, the piece of equipment which failed to perform was the pilot operated relief valve, and we are working with the supplier of that valve to enhance the probability of its performing its function.

The other question with respect to the instrumentation and the information available to the operator, yes, we are working on that. We are developing a technique by which we can indicate the actual position of the relief valve or that indicates unambiguously whether it is opened or closed.

We are working on other instrumentation systems which will give the operator a clear indication of the temperature and pressure conditions in his reactor coolant system and alert him to the possibility that he may be approaching saturated conditions in that system.

Mr. MCCORMACK. Thank you.

Mr. Wydler?

Mr. WYDLER. You are going to try to have some sort of notification device to know if the valve is not only opened but that it is closed again, and that will be part of what you are going to do so you know that fact.

Is that what you just said?

Mr. MACMILLAN. Yes, sir.

Mr. WYDLER. I am intrigued with this auxiliary feed pump being shut off. I mean that seems to me like an almost unbelievable thing for somebody to do and leave like that. Yet, I am reading here about something that happened in 1975, apparently the exact same thing took place, some plant operator turned off the very same valves.

The manually operated water supply valve, two auxiliary feedwater pumps were shut and they didn't have a supply of water. Because that is a manually operated valve, there was no control panel indication that the valve had been closed. At least the one auxiliary feed water pump must operate to remove heat, and so on.

Now, that was the exact same thing that happened here, wasn't it?

Mr. MACMILLAN. I am not familiar with that particular situation.

Mr. WYDLER. Calvert Cliffs, unit 1, Lusby, Md., December 1975.

Mr. MACMILLAN. I would say, as you have read the description of events there, I don't believe it is exactly comparable. The isolation or block valve in this auxiliary feedwater system is indicated in the control room and can be operated from the control room, and was operated and opened up 8 minutes into the incident. So it was not

a case of some manual valve having been closed without the operator's awareness.

These valves are indicated in the control room and can be opened from the control room.

Mr. WYDLER. So you mean to say that everybody knew then—we were told this was something that they found out after a while—that somebody had turned these valves off. Literally they had done it intentionally and it was done and there was a constant indication they were shut at the time the accident took place; is that what you are saying?

Mr. MACMILLAN. I don't believe I said they knew they were shut. What I said was the position of the valves are indicated in the control room and the operator did not recognize until about 8 minutes into the accident that they were, in fact, closed rather than being open as they should have been, and at that point he did take the action to open up those valves.

Mr. WYDLER. There is one other case here I was reading about, a situation where apparently—have you been shown at any time this report that was written on January 8, 1979?

A Commission inspector complained about the Babcock & Wilcox designed nuclear plants, wrote a report about it and insisted that the report be made public. He said that there were basic safety problems with your design. This was a regional inspector; have you ever seen this report?

Mr. MACMILLAN. Could you identify it more specifically?

Mr. WYDLER. January 8, 1979; I don't know why it's written in these very vague terms, but here's the information I have. A Commission inspector, unidentified, wrote a memorandum on January 8, 1979, stating there appeared to be generic safety problems with Babcock & Wilcox designed nuclear plants. The regional inspector asked that his memorandum be forwarded to the Atomic Safety and Licensing Board.

Have you ever seen that memorandum?

Mr. MACMILLAN. I don't recognize it by that description.

Mr. WYDLER. Have you, Dr. Roy?

Dr. ROY. No, sir.

Mr. WYDLER. I understand it was brought to the attention of the operators of Three Mile Island the day after the accident, which would have been a little late. I am surprised that you gentlemen, even at this date, have never seen or heard of this report.

I am told on March 6—that was the date of the accident—finally after a lot of pressure was put on a lot of people, a Commission's Assistant Director for Light Water Reactors also recommended that those atomic safety and licensing boards with jurisdiction over Babcock & Wilcox designed plants be informed of the regional inspector's safety concerns.

He specifically recommended that the board for Three Mile Island powerplant be informed.

Mr. MACMILLAN. I think I have identified the memo that you are referring to, Congressman. I believe this is a report by a reactor inspector named J. S. Creswell, in a memorandum he addressed to NRC.

Mr. WYDLER. You know more than I do. That's probably so.

Mr. MACMILLAN. That's why I was having trouble identifying it. This is dated January 8, 1979, and the subject was conveying new information to licensing boards, Davis-Besse 2 and 3 and Midland units 1 and 2.

Those four units are under construction and they do incorporate Babcock & Wilcox nuclear steam systems, and we have seen that letter and we have responded to that letter as it is applicable to Three Mile Island.

Mr. WYDLER. When did you respond?

Mr. MACMILLAN. We ought to get you a more detailed breakdown of that.

The letter Mr. Creswell wrote referred to a rapid cooldown which occurred at the Sacramento Municipality Utility District at Rancho Seco District, which is the background for which he raised his concerns. I am prepared to tell you, if you want to know, how they would respond to that cooldown and what its applicability was to Three Mile Island.

Mr. WYDLER. I am asking when was the report brought to your attention and when did you respond to it?

Mr. MACMILLAN. I am not able to identify, Congressman, that this was brought to our attention, this particular Creswell letter was brought to our attention. We were aware of that because it was made public. We recognize that it was referring to the earlier incident at the Sacramento unit.

We were responsive to that earlier incident at the Sacramento unit and had alerted our operators to the problem that developed there, and had discussed the implications of that with the people at Three Mile Island.

Mr. WYDLER. I am going to have to get off this topic, but I just would like to know, have you a copy of the report? Does your company have a copy of the report? Have they made an answer to it?

Mr. MACMILLAN. We have a copy, but I don't believe we have it because it was brought to our attention through the normal licensing channels.

Mr. WYDLER. In other words, you have never been officially informed of it; is that what you are telling me?

Mr. MACMILLAN. I believe that is the case. I can confirm that.

Mr. WYDLER. Well, would you and would you make available for the record the copies of the report and any memorandum or answers that you made to it?

Mr. MACMILLAN. Yes, sir.

Mr. WYDLER. And if you would, if it's not apparent on the face of the document, would you give me a time sequence of these items, if it is not otherwise apparent from the documents you are going to supply?

Mr. MACMILLAN. Yes, sir.

Mr. WYDLER. All right.

Thank you, Mr. Chairman.

[The information follows:]*

Mr. MCCORMACK. Thank you, Mr. Wydler.

*This information is provided in Mr. MacMillan's letter to Congressman Wydler of May 29, 1979. A copy of this letter is included in the Appendix "Questions and Answers for the Record", for May 23, 1979.

This particular series of questions and answers raises the point that there will undoubtedly be questions submitted in writing to Mr. MacMillan, and I assume you will be prepared to answer them.

Mr. MACMILLAN. Yes, sir.

Mr. MCCORMACK. Mr. Ertel, do you have any questions?

Mr. ERTEL. Thank you, Mr. Chairman.

Mr. MacMillan, on page 12 of your testimony you indicated as one of the significant events, the second one you said:

> After approximately 2¼ hours the operators recognized data from plant instrumentation which indicated the valve was opened, including quench tank rupture at 17 minutes, and closed the block valve in the relief valve discharge line, thus preventing any further loss of primary coolant.

Can you give us any reason it would take 2¼ hours if there were proper instrumentation to read out that line was open, why it would take 2¼ hours to recognize that relief valve had not reseated?

Mr. MACMILLAN. I think I commented earlier on one of the questions that the evidence that was available to the operator that the valve was open included a thermocouple on the discharge piping from the valve that goes to the quench tank, the quench tank pressure and level, which is alarmed, and indicated on a panel in the control room.

Mr. ERTEL. It indicated it was over-full, did it not, that the water level was high?

Mr. MACMILLAN. Yes, sir, and should have been a clear indication that there was energy being discharged and water, steam being discharged, through this tank on a continuing basis.

Mr. ERTEL. I guess that the next question would follow on: The simulator which you use, and I think you have one at Lynchburg, Va., on which you train the operators, is there any training there to show that by utilizing both the temperature readout and the quench; that there is too much water, if you want to call it that, in the pressurizer, what you should do?

Do you have a training program on it?

Mr. MACMILLAN. The simulator in Lynchburg is capable of simulating the condition of an open pilot operated relief valve and that is one of the equipment failures which we do simulate in the course of the training of the operators.

Mr. ERTEL. So you would say that he should check both the temperature and the water level in the pressure?

Mr. MACMILLAN. In the quench tank.

Mr. ERTEL. So that he would have that training and he should know that, the proper procedure to follow?

Mr. MACMILLAN. He had been through that and he had a procedure available to him for that purpose, yes.

Mr. ERTEL. Do you have any idea how long prior to this accident this operator had gone through that training program with the simulator?

Mr. MACMILLAN. I don't know specifically.

Mr. ERTEL. I know I have a lot of questions but I want to turn now to page 13, the fourth item:

"The containment isolated in accordance with the license design." It's my understanding that the purpose of the NRC, at least some of their ideas are to make sure that there is a contain-

ment and none of the radioactive material gets outside of the containment building.

Now, is that a policy of the NRC and if so, why would they license a design which would allow for the escape of radioactive material to the atmosphere?

Mr. MACMILLAN. Let me say that it is certainly the intent of the containment building to contain the contents of an accident that might develop in a reactor coolant system and keep that radioactivity in the reactor building. As I indicated earlier, clearly the design basis for this containment isolation system needs to be and will be re-evaluated.

Mr. ERTEL. I don't think that is really a response to the question. Why would they give a license if their policy is to have a containment? That is what a containment building is for, it seems to me, is to contain and isolate.

Then do you know how you got your license application through with a license design which would allow escape into the atmosphere if the policy says there should be a containment?

Mr. MACMILLAN. Well, the containment was designed to isolate when the containment pressure got up to 4 pounds. Now that would normally occur if there were a moderate to large size coolant system break. In this particular case, the break was very small and the pressure did not build up to that level for some time into the incident and it was during that time when the water was transferred.

So I think that I would have to speculate that the line of thinking at the time was that in the event a loss of coolant accident the building pressure will go up to 4 pounds and it would isolate, and there was not a recognition of the potentiality of a very small break creating this situation.

Mr. ERTEL. So what you are saying is we have a mistake probably in both the design and the licensing procedures, because they did not consider a small pipe break.

Is that what you are saying?

Mr. MACMILLAN. That is my opinion, yes, sir.

Mr. ERTEL. Thank you.

Thank you, Mr. Chairman.

I will submit a lot of questions in writing.

Mr. MCCORMACK. Thank you, Mr. Ertel.

We are going to our next witness now.

Mr. MACMILLAN. We want to thank you. We have taken, as is usual, attempting to get our feet on the ground, more time with one witness than is really fair to the other witnesses. Maybe we will pick some of that up as we go along, because we have gained a lot of information from this discussion.

I want to thank you and ask you if you will stand by for the rest of the hearing?

Mr. MACMILLAN. Yes, sir.

Mr. MCCORMACK. Thank you.

Our next witness is Mr. Herman Dieckamp, president, General Public Utilities Corp.

We want to welcome you. I recall seeing you the day after the accident on Thursday, when Mr. Fuqua and I and others from the

committee visited you, we are still trying to understand what was going on.

Your testimony has been received by the committee and will, without objection, be inserted in the record at this point with all supplemental information.

[The prepared statement of Mr. Dieckamp follows:]

Testimony
by

Herman Dieckamp, President
General Public Utilities Corp.

The accident at Three Mile Island on March 28, 1979 has had a profound and shocking impact on the residents of central Pennsylvania, Met-Ed and GPU, our customers and employees, and on the future of nuclear energy. While nuclear power plant systems and procedures have been designed to accommodate extreme malfunctions of both equipment and personnel, the reality of this accident has had a far greater impact than we could have ever projected.

We pledge our sincere support and cooperation in the efforts of this committee to make known and to assess the full meaning of this accident. At the outset we would like to emphasize that we do not in any way wish to minimize the significance of this accident and we seek no excuse from our responsibilities as plant owners and operators. We strongly believe that it is important to understand the factors which contributed to this accident and to the ability of our Company, government agencies and the affected population to cope with it. If this accident is viewed simply as a matter of management or operator failure, the full significance of this experience will be lost. The accident was a result of a complex combination of equipment malfunctions and human factors. The accident departed from the accepted design basis for current nuclear plants. The response of all organizations was influenced by the fact that it was the first accident of this magnitude in the history of the U.S. commercial nuclear power program.

It is our hope that this testimony and these hearings can contribute to an understanding of this accident, the many complex factors that led to it, and the critical learning that we are obligated to derive from it.

ACCIDENT CAUSES

We would like to focus this portion of the testimony on our initial impression of the primary causes of the accident. We do not propose today to present a detailed description or sequence of events for the accident. We are in general agreement with the NRC testimony on this subject as previously

presented to the U.S. Senate Subcommittee on Nuclear Regulation. We may, however, differ somewhat on the relative importance of the various ingredients of the accident.

While extensive data and information have been made available Met-Ed and GPU have not completed a detailed reconstruction of the accident or verified the relative importance of the many ingredients. The following appear to be the major causes of the severity of this accident.

a) Shortly (4 sec.) after the turbine and reactor trip at about 4:00 a.m. on March 28, a reactor coolant system pressure relief valve opened to relieve the normal pressure excursion, but the valve failed to re-close after the pressure decreased. The operator was unaware the valve had not closed. An order for valve closure was signaled in the control room. The operator monitored temperature near the valve to indicate valve position. However, the temperature did not clearly confirm the continuing coolant flow thru the valve. The loss of reactor coolant and accompanying reactor coolant system pressure decrease continued for about two hours until the operator closed the block valve which stopped the uncontrolled loss of reactor coolant.

b) The operator anticipated reactor coolant system behavior and immediately began to add make-up water to the system. When system pressure decreased to 1600 psi about 2 minutes into the accident the High Pressure Injection (HPI) safety system was automatically initiated. Four to five minutes into the accident the operator reduced injection of water from the HPI system when pressurizer level indicated that the system was full.

c) Operator training and experience had emphasized the retention of a steam vapor space in the pressurizer. However, following the rapid depressurization of the system, the pressurizer level indicator inferred a fullness of the reactor coolant system. This level indication led the operators to prematurely reduce HPI flow. The operator apparently did not anticipate that continued depressurization could lead to steam void formation in hot regions of the system other than the pressurizer and that under these conditions his level or fullness indication was ambiguous and misleading.

d) Because of the presence of steam voids in the primary system, indicated primary coolant flow decreased. The operator turned off the main coolant pumps in order to prevent damage to the pumps. The plant staff expected cooling by natural circulation. Voiding prevented natural circulation and prevented reestablishment of pumping.

e) An emergency feed system, designed to provide cooling to the steam generators in case of loss of the normal feed water system, was blocked because of two closed valves. This system would have been available to provide secondary cooling. The operator discovered this condition and initiated secondary system emergency cooling by opening the closed valves 8 minutes after the start of the plant transient. The plant safety system surveillance program had called for the placing of these valves into the closed position six times during the first 3 months of 1979 for testing of the operability of the pumps or valves. The surveillance program required a verification of valve position twelve times during this period. The last test of the emergency feed system was conducted on the morning of March 26, about 42 hours before the March 28 accident.

f) Primary coolant initially vented through the pressurizer relief was pumped into the auxiliary building because the containment design did not require isolation until building pressure reached 4 psi. Continued plant operation required some transfer of fission products to the auxilliary building.

The first five of the above factors led to severe undercooling of the reactor core. The fuel became extremely hot and the integrity of the fuel cladding was lost. The first indication of fuel cladding damage and fission product release came with high radiation alarms. An extensive reaction between fuel cladding and primary coolant steam liberated large quantities of hydrogen gas into the primary reactor coolant system. The resulting configuration of the reactor core is still the object of analytical attempts to reconstruct the accident. At various times during the day of March 28 as the operators worked to reestablish control of system cooling, the core suffered additional overheating and damage. Forced cooling of the primary system was reestablished at about 8:00 p.m. on the 28th. A summary sequence of events is attached as Appendix A.

Performance of the plant operators has been the subject of much speculation. Their performance must be viewed in the context of:

1. Ambiguous and contradictory information relating to pressurizer level and relief valve closure.
2. The experience and training underlying the operators' emphasis on maintaining pressurizer level.
3. The operators' awareness of equipment limitations.
4. The time and opportunity to assimilate large quantities of data with varying degrees of physical and chronological availability.

The operators on duty at the time of the accident are a qualified and competent group. They performed their functions professionally in a period of extreme stress. Our own investigation and the many other governmental investigations will ultimately attempt to determine the role of operator performance in this accident.

PLANT STATUS - CURRENT AND FUTURE

The plant is stable and in a cold shutdown state. The fission product decay heat being liberated in the damaged reactor core/fuel is just slightly in excess of 1 Mw thermal (0.04% of full power). This power level is normal for this time after a reactor trip. The core is being cooled by the natural circulation of primary reactor coolant. No primary system pumps are required in this mode of cooling. The average temperature of the primary coolant is about 175°F. As a result of local flow restrictions associated with the physical damage to the core, the highest in-core thermocouple reading is about 300°F.. The heat from the reactor is being rejected through one steam generator and the plant condenser.

An immediate objective of the activities at the plant has been to establish a redundant heat removal path through the plant's second steam generator and an intermediate heat exchange loop without using the plant condenser. This will enable the transport of the core heat through the plant's two steam generators for ultimate rejection through two independent secondary paths. The objective is to minimize the number of active components that must function in these circuits in order to ensure reliable heat removal.

The plant has been in the natural circulation mode since April 27, 1979. The plant's several and original emergency cooling capabilities are available to backup this cooling approach. One of these systems, the plant's decay

heat removal system has been the subject of a high priority effort to upgrade the ability of that system to miminize releases to the environment while operating with high primary coolant radioactivity. As part of this effort, work has been under way to enable the installation of redundant backup modules in addition to the two that are part of the plant design.

DEVELOPMENT OF UNDERSTANDING

The accident differed from the popular perception of common accidents because of the extended time necessary to achieve a full definition of its scope. In this case, the time required to develop a reasonably complete understanding of the accident and its result was approximately 2-3 days. It should be stressed that while the full impact of the accident was not fully evaluated, there was sufficient understanding of system conditions to maintain plant cooling stability during this period. There were three key areas in which full evaluation required time:

1. Assessment of the degree of core damage.
2. The generation of hydrogen gas during the accident and a)its potential impact on system heat transfer and b) its implications relative to core damage.
3. The impact of continued operations on the potential for release of radioactive material from the plant.

The accident's initiating event was a loss of feedwater flow. During the first few minutes following this event, the plant staff attempted to recover from what they thought was a normal transient. Beyond this time, the plant behavior became inceasingly abnormal. The loss of coolant via the reactor coolant system relief valve was identified and the valve was isolated around 6:20.a.m. At approximately 6:50.a.m. several radiation alarms alerted the

staff to possible reactor core damage. In the time period of 5:30-7:30 a.m. the reactor core became uncovered and suffered extensive damage, including significant zirconium-water reaction. During the next 12 hours, the operators attempted a number of strategies to establish dependable core cooling. This objective was achieved about 8:00 p.m. on March 28, at which time the plant symptoms included:

a) Some local reactor coolant temperatures were above coolant saturation temperature.

b) High radiation levels existed in the reactor containment and the auxiliary buildings.

At this point in time the high radiation levels indicated that fuel damage had occurred but the extent was not defineable. The complicating presence of hydrogen gas in the primary system had not yet been detected.

A preliminary sequence of events was being extracted from the various plant records by the afternoon of March 28. The data for the 16-hour accident period became available in summary graphical form on the morning of March 29. The probable occurrence of a zirconium - water reaction and the presence of hydrogen gas in the reactor containment building was deduced during the the evening of March 29 from containment pressure records that indicated a pressure spike during the accident. The size of the hydrogen gas bubble in the reactor coolant system was first measured from system data just after midnight March 30. The concentration of hydrogen gas in the containment building was determined from analysis of the first containment gas sample taken about 4:00 a.m. on March 31. The first quantitative data with respect to fission product release and degree of reactor fuel damage became available via analysis of a primary coolant sample taken at 5:00 p.m. on March 29. The data

on hydrogen and fission product release provided the basis for the next level of core damage evaluation.

The point of the above enumeration is simply to indicate the time necessary to gain insight into the scope of the accident and, in turn, to provide the basis for a meaningful analysis. In any review of the timeliness of the accident assessment, it must be remembered that the plant management and staff faced immediate, continuing and first priority demands to maintain the damaged plant in a controlled and safe state.

LEARNING FROM THE EXPERIENCE

As a result of the accident, we can already with hindsight, identify many areas that should be reviewed in depth, including emergency planning, operator training, reactor design philosophy, man machine interface, financial risk diversification, and crisis management procedures, to name a few. While the list of specific areas is already large and growing, it is still too soon after the incident to define and implement specific actions. The lessons of TMI-2 should be identified and applied only after an objective review of the accident and its aftermath. We must resist pressures to act precipitously.

In the following sections I will attempt to present a general perspective on some things that the nuclear industry and the various government agencies should be reviewing. I shall not attempt to present complete answers to the host of questions raised by the TMI-2 accident or detailed recommendations for changes in nuclear plant design, operations, or regulations.

(1) Physical Data

The accident at TMI-2 produced a large amount of technical data relating to the behavior of materials and systems under extreme accident conditions. A major contribution the government can make is to play a leadership role in

evaluating the physical data and material resulting from the accident. This should include an examination of the damaged core and an assessment of the damage in relationship to the extreme environmental conditions imposed by the accident. Such data must be of great value in the future evaluation of emergency cooling criteria. The accident has also resulted in a large number of components having been subjected to intense radiation and thus constituting a wealth of information on environmental effects and failure modes.

(2) Design Philosophy

Among other things, the TMI-2 incident control and recovery activities suggest areas of design philosophy that should be carefully considered. Specific areas that merit attention include:

a. An overall review of the complexity of nuclear power plant systems to assure that in the light of required surveillance and increased opportunity for human error, additional systems add incrementally to the safety of the plant. We should seek affirmation that the design criteria are being met by the simplest and most direct approach.

b. The design tradeoff between minimizing pressure vessel penetrations to provide assurance of primary system integrity and the ability to accommodate unforeseen needs for additional access to the primary system, eg. for instrumentation or venting,

c. The ability to place a stricken plant into a relatively passive and stable mode with minimal reliance on active components (i.e., pumps, instruments, power supplies, etc.) whose reliability may have been degraded by the accident and its aftermath. An example is reliance on natural circulation in the primary coolant system. An envelope